г.Минск тел.8(017)2005646 www.fotorele.net модули EUPEC IGBT Infineon minsk17@tut.by

Presentation . . . 3

**IGBT Modules . . . 7**
*Overview IGBT . . . 7*
*Low Power . . . 8*
EasyPIM™ Power Integrated Modules . . . 8
EasyPACK . . . 10
EasyDUAL . . . 12
*Medium Power . . . 13*
EconoPIM™ Power Integrated Modules . . . 13
EconoPACK™ . . . 15
34 mm and 62 mm Modules . . . 17
EconoPACK™+ . . . 20
EconoDUAL™ . . . 21
*High Power . . . 22*
IGBT Modules IHM . . . 22
IGBT Modules IHV . . . 24
Diode Modules . . . 24
*Drivers . . . 26*
*EiceDRIVER™ . . . 26*

**SCR/Diode Modules . . . 27**
**Bridge Rectifier / AC Switches**
EasyBRIDGE . . . 28
EconoBRIDGE™ . . . 30
IsoPACK™ . . . 31
*Overview PowerBLOCK Thyristor Modules for Phase Control . . . 32*
PowerBLOCK Thyristor Modules for Phase Control . . . 33
PowerBLOCK Single Thyristor Modules for Phase Control . . . 34
*Overview PowerBLOCK Thyristor/Diodes Modules for Phase Control . . . 35*
PowerBLOCK Thyristor/Diode Modules for Phase Control . . . 36
*Overview PowerBLOCK Diodes/Thyristor Modules for Phase Control . . . 37*
PowerBLOCK Diode/Thyristor Modules for Phase Control . . . 38
*Overview PowerBLOCK Diode Modules for Phase Control . . . 39*
PowerBLOCK Rectifier Diode Modules for Phase Control . . . 40
PowerBLOCK Fast Thyristor Modules . . . 41
PowerBLOCK Fast Asymmetric Thyristor Modules . . . 42
PowerBLOCK Fast Diode Modules . . . 43

**Presspacks . . . 44**
*Overview Phase Control Thyristors in Disc Housings . . . 44*
Pulsed Power Applications . . . 45
Traction Crow Bar . . . 45
Phase Control Thyristors . . . 46
Fast Thyristors . . . 51
Fast Asymmetric Thyristors . . . 54
*Overview Rectifier in Disc Housings . . . 55*
Rectifier Diodes . . . 56
Freewheeling Diodes . . . 59
Snubber Diodes . . . 60
Fast Rectifier Diodes . . . 61
Avalanche Rectifier Diodes . . . 63
Welding Diodes . . . 63
Insulated Cells . . . 64

**Stacks . . . 65**
Possible Combinations of Presspacks and Heatsinks . . . 65
ModSTACK™ . . . 66
PrimeSTACK™ . . . 68

**Outlines . . . 70**
Heatsinks . . . 70
ModSTACK™ . . . 79
PrimeSTACK™ . . . 83
IGBT Modules . . . 89
EasyBRIDGE . . . 102
EconoBRIDGE™ Rectifier . . . 103
IsoPACK™ Bridge Rectifier and AC-Switches . . . 104
PowerBLOCKs . . . 105
Presspacks . . . 108
*EiceDRIVER™* . . . 120

**Accessories . . . 121**
Mounting Hardware for EasyPIM™, EasyPACK, EasyBRIDGE, EasyDUAL Modules 121
Gate Leads for PowerBLOCK Thyristor Modules . . . 122
Standard Gate Leads for Disc Type Devices . . . 123
Clamping Force and Disc Diameter . . . 124

**Explanations . . . 126**
Letter Symbols . . . 126
Type Designations . . . 128
Package Units . . . 130
Certificates . . . 132

**Contact Worldwide . . . 133**
**Terms and conditions of delivery . . . 135**

Further data sheets are available on request:
IGBT-Modules
PIM Modules
Thyristor-/Diode-Modules
Fast Thyristors
Thyristors for Phase Control
Power Rectifier Diodes
Snubber and Freewheeling Diodes

Actual, extensive data can be obtained in PDF-format from our internet address: www.infineon.com



радиодетали электронные компоненты со склада и под заказ

# Overview IGBT's

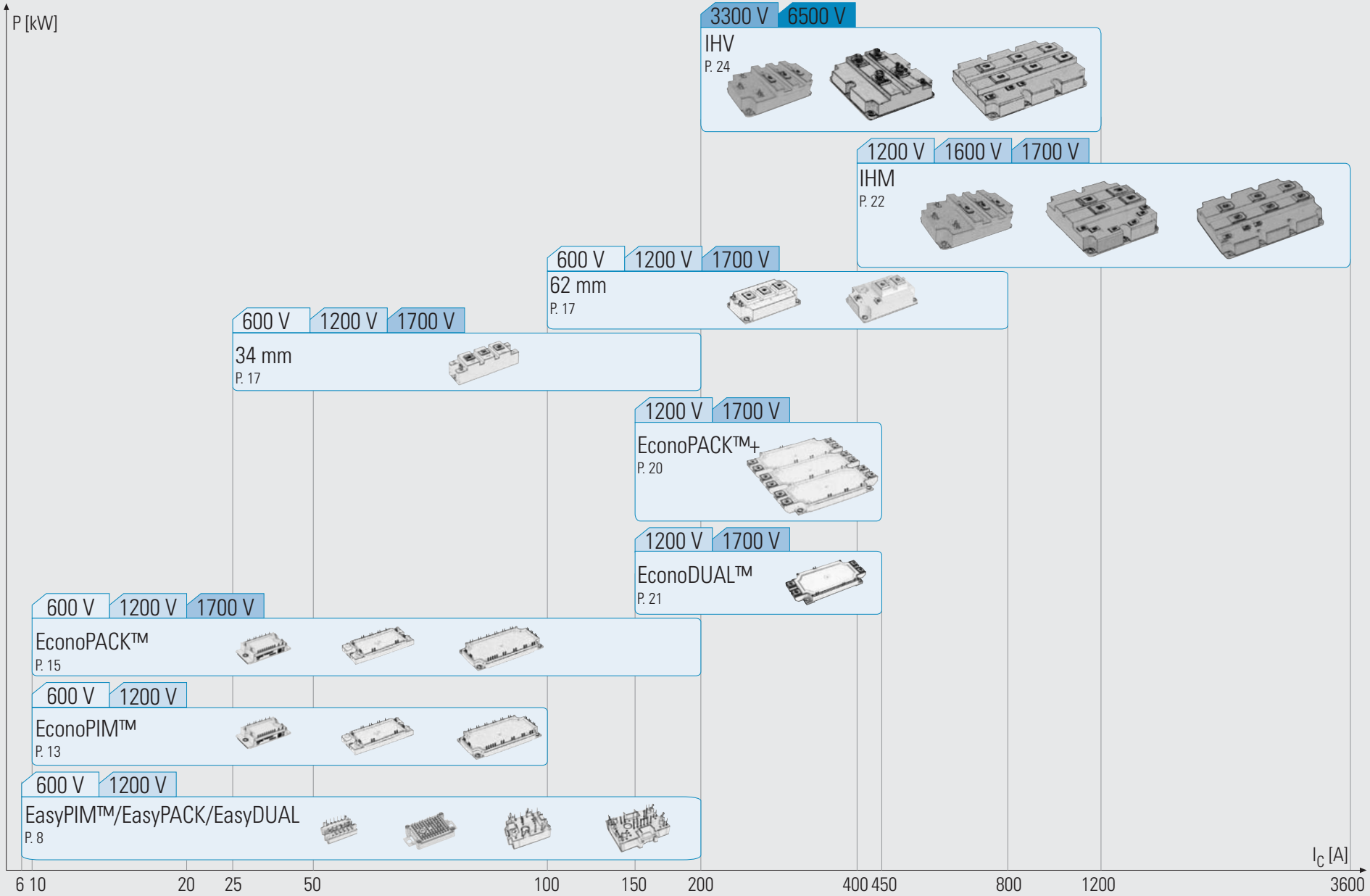

г.Минск тел.8(017)2005646 www.fotorele.net модули EUPEC IGBT Infineon minsk17@tut.by



# IGBT Low Power Modules
# EasyPIM™ Power Integrated Modules

## Single Phase 600 $V_{CES}$

| Type | IGBT Inverter | | | | | | | Rectifier Diodes | | | Brake Chopper | | | Outline / page |
|---|---|---|---|---|---|---|---|---|---|---|---|---|---|---|
| | $V_{CE}$ V | $I_C$* A $T_C = 80\,°C$ | $I_C$ A $T_C = 25\,°C$ | $V_{CEsat}$ V $T_{vj} = 25\,°C$ | $R_{thJH}$ K/W typ. | $R_{thJC}$ K/W max. | Eon + Eoff mJ $T_{vj} = 125\,°C$ | $V_{RRM}$ V | $I_d$ A | $R_{thJC}$ K/W | $V_{CE}$ V | $I_C$* A $T_C = 80\,°C$ | $R_{thJC}$ K/W max. | |
| IGBT[3] | | | | | | | | | | | | | | |
| FB6R06VE3 | 600 | 6 | 11 | 1,55 | 4,90 | 3,90 | 0,30 | 800 | 10 | 2,10 | | | | L_750a/89 |
| FB10R06VE3 | 600 | 10 | 16 | 1,55 | 4,10 | 3,10 | 0,67 | 800 | 10 | 2,10 | | | | L_750a/89 |
| FB15R06VE3 | 600 | 15 | 20 | 1,55 | 3,50 | 2,60 | 1,05 | 800 | 10 | 2,10 | | | | L_750a/89 |
| IGBT[2] | | | | | | | | | | | | | | |
| ■ FB10R06KL4 | 600 | 10 | 16 | 1,95 | 2,20 | 1,80 | 0,80 | 800 | 10 | 1,95 | | | | L_1a/90 |
| IGBT[3] | | | | | | | | | | | | | | |
| FB10R06XE3 | 600 | 10 | 16 | 1,55 | 3,40 | 2,90 | 0,50 | 800 | 10 | 1,60 | | | | L_1a/90 |
| FB15R06XE3 | 600 | 15 | 22 | 1,55 | 2,70 | 2,10 | 0,76 | 800 | 15 | 1,60 | | | | L_1a/90 |
| FB20R06XE3 | 600 | 20 | 27 | 1,55 | 2,35 | 1,95 | 1,00 | 800 | 20 | 1,60 | | | | L_1a/90 |
| IGBT[2] | | | | | | | | | | | | | | |
| ■ FB10R06KL4G | 600 | 10 | 16 | 1,95 | 2,20 | 1,80 | 0,80 | 800 | 10 | 1,60 | | | | L_2a/91 |
| ■ FB15R06KL4 | 600 | 15 | 19 | 1,95 | 2,40 | 2,00 | 1,00 | 800 | 15 | 1,00 | | | | L_2b/91 |
| ■ FB20R06KL4 | 600 | 20 | 25 | 1,95 | 1,80 | 1,60 | 1,29 | 800 | 20 | 1,00 | | | | L_2b/91 |
| IGBT[3] | | | | | | | | | | | | | | |
| FB10R06YE3 | 600 | 10 | 16 | 1,55 | 3,40 | 2,90 | 0,50 | 800 | 20 | 1,60 | | | | L_2a/91 |
| FB15R06YE3 | 600 | 15 | 22 | 1,55 | 2,70 | 2,10 | 0,76 | 800 | 15 | 1,20 | | | | L_2b/91 |
| FB20R06YE3 | 600 | 20 | 27 | 1,55 | 2,35 | 1,95 | 1,00 | 800 | 20 | 1,20 | | | | L_2b/91 |
| ◆ FB10R06WE3 | 600 | 10 | data on request | | | | | data on request | | | data on request | | | |
| ◆ FB15R06WE3 | 600 | 15 | data on request | | | | | data on request | | | data on request | | | |
| ◆ FB20R06WE3 | 600 | 20 | data on request | | | | | data on request | | | data on request | | | |
| ◆ FB30R06WE3 | 600 | 30 | data on request | | | | | data on request | | | data on request | | | |
| IGBT[2] | | | | | | | | | | | | | | |
| FB10R06KL4G_B1 | 600 | 10 | 15 | 1,95 | 2,80 | 2,20 | 0,80 | 800 | 10 | 2,40 | 600 | 10 | 2,20 | L_2c/91 |
| FB15R06KL4_B1 | 600 | 15 | 19 | 1,95 | 2,40 | 2,00 | 1,00 | 800 | 15 | 1,00 | 600 | 15 | 2,00 | L_2d/92 |
| FB20R06KL4_B1 | 600 | 20 | 25 | 1,95 | 1,80 | 1,60 | 1,30 | 800 | 20 | 1,00 | 600 | 20 | 1,60 | L_2d/92 |
| IGBT[3] | | | | | | | | | | | | | | |
| FB10R06YE3_B1 | 600 | 10 | 16 | 1,55 | 3,40 | 2,90 | 0,50 | 800 | 20 | 1,60 | 600 | 10 | 2,90 | L_2c/92 |
| FB15R06YE3_B1 | 600 | 15 | data on request | | | | | 800 | 15 | | data on request | | | L_2d/92 |
| FB20R06YE3_B1 | 600 | 20 | 27 | 1,55 | 2,35 | 1,95 | 1,00 | 800 | 20 | 1,20 | 600 | 20 | 1,95 | L_2d/92 |

■ Not for new design ◆ New type *as specified in data sheet

Mounting Hardware see page 121.

радиодетали электронные компоненты со склада и под заказ

# IGBT Low Power Modules
# EasyPIM™ Power Integrated Modules

## Three Phase 600 $V_{CES}$

| Type | IGBT Inverter | | | | | | | Rectifier Diodes | | | Brake Chopper | | | Outline / page |
|---|---|---|---|---|---|---|---|---|---|---|---|---|---|---|
| | $V_{CE}$ V | $I_C$* A $T_C = 80\,°C$ | $I_C$ A $T_C = 25\,°C$ | $V_{CEsat}$ V $T_{vj} = 25\,°C$ | $R_{thJH}$ K/W typ. | $R_{thJC}$ K/W max. | Eon + Eoff mJ $T_{vj} = 125\,°C$ | $V_{RRM}$ V | $I_d$ A | $R_{thJC}$ K/W | $V_{CE}$ V | $I_C$* A $T_C = 80\,°C$ | $R_{thJC}$ K/W max. | |
| 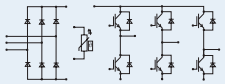 | IGBT[2] | | | | | | | | | | | | | |
| FP10R06KL4_B3 | 600 | 10 | 16 | 1,95 | 2,20 | 1,80 | 0,80 | 800 | 10 | 1,60 | | | | L_2f/92 |
| | IGBT[3] | | | | | | | | | | | | | |
| FP10R06YE3_B3 | 600 | 10 | 16 | 1,55 | 3,40 | 2,90 | 0,50 | 800 | 20 | 1,60 | | | | L_2f/92 |
| 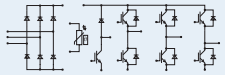 | IGBT[2] | | | | | | | | | | | | | |
| FP10R06KL4 | 600 | 10 | 15 | 1,95 | 2,80 | 2,20 | 0,80 | 800 | 10 | 2,40 | 600 | 10 | 2,20 | L_2e/92 |
| FP15R06KL4 | 600 | 15 | 20 | 1,95 | 2,05 | 1,60 | 1,00 | 800 | 15 | 1,60 | 600 | 15 | 1,60 | L_2e/92 |
| FP20R06KL4 | 600 | 20 | 25 | 1,95 | 1,80 | 1,60 | 1,30 | 800 | 20 | 2,00 | 600 | 20 | 1,60 | L_2e/92 |
| | IGBT[3] | | | | | | | | | | | | | |
| FP10R06YE3 | 600 | 10 | 16 | 1,55 | 3,40 | 2,90 | 0,50 | 800 | 20 | 1,60 | 600 | 10 | 2,90 | L_2e/92 |
| FP15R06YE3 | 600 | 15 | 22 | 1,55 | 2,70 | 2,10 | 0,76 | 800 | 15 | 1,60 | 600 | 15 | 2,10 | L_2e/92 |
| FP20R06YE3 | 600 | 20 | 27 | 1,55 | 2,35 | 1,95 | 1,00 | 800 | 20 | 1,60 | 600 | 20 | 1,95 | L_2e/92 |
| FP30R06YE3 | 600 | 30 | 37 | 1,55 | 2,00 | 1,55 | 1,60 | 800 | 20 | 1,60 | 600 | 30 | 1,55 | L_2e/92 |
| ◆ FP10R06WE3 | 600 | 10 | data on request | | | | | data on request | | | data on request | | | |
| ◆ FP15R06WE3 | 600 | 15 | data on request | | | | | data on request | | | data on request | | | |
| ◆ FP20R06WE3 | 600 | 20 | data on request | | | | | data on request | | | data on request | | | |
| ◆ FP30R06WE3 | 600 | 30 | data on request | | | | | data on request | | | data on request | | | |

* as specified in data sheet ◆ New type IGBT[2] types on request

## Three Phase 1200 $V_{CES}$

| Type | IGBT Inverter | | | | | | | Rectifier Diodes | | | Brake Chopper | | | Outline / page |
|---|---|---|---|---|---|---|---|---|---|---|---|---|---|---|
| | $V_{CE}$ V | $I_C$ A $T_C = 80\,°C$ | $I_C$ A $T_C = 25\,°C$ | $V_{CEsat}$ V $T_{vj} = 25\,°C$ | $R_{thJH}$ K/W typ. | $R_{thJC}$ K/W max. | Eon + Eoff mJ $T_{vj} = 125\,°C$ | $V_{RRM}$ V | $I_d$ A | $R_{thJC}$ K/W | $V_{CE}$ V | $I_C$* A $T_C = 80\,°C$ | $R_{thJC}$ K/W max. | |
| 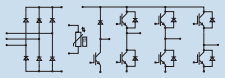 | IGBT[3] | | | | | | | | | | | | | |
| ■ FP10R12YT3 | 1200 | 10 | 16 | 1,90 | 2,15 | 1,80 | 2,40 | 1600 | 10 | 1,5 | 1200 | 10 | 1,80 | L_2e/92 |
| FP10R12YT3_B4 | 1200 | 10 | 16 | 1,90 | 2,15 | 1,80 | 2,40 | 1600 | | | 1200 | 10 | 1,80 | L_2e/92 |
| FP15R12YT3 | 1200 | 15 | 25 | 1,70 | 1,70 | 1,30 | 3,50 | 1600 | 15 | 1,40 | 1200 | 15 | 1,30 | L_2e/92 |
| ◆ FP10R12WT3 | 1200 | 10 | data on request | | | | | data on request | | | data on request | | | |
| ◆ FP15R12WT3 | 1200 | 15 | data on request | | | | | data on request | | | data on request | | | |

■ Not for new design ◆ New type * as specified in data sheet IGBT[3] standard types on request Mounting Hardware see page 121.

г.Минск тел.8(017)2005646 www.fotorele.net модули EUPEC IGBT Infineon minsk17@tut.by



# IGBT Low Power Modules
# EasyPACK

## 600 $V_{CES}$

| Type | | IGBT Inverter $V_{CE}$ V | $I_C$* A $T_C = 80\,°C$ | $I_C$* A $T_C = 25\,°C$ | $V_{CEsat}$ V $T_{vj} = 25\,°C$ | $R_{thJH}$ K/W typ. | $R_{thJC}$ K/W max. | Eon + Eoff mJ $T_{vj} = 125\,°C$ | Outline / page |
|---|---|---|---|---|---|---|---|---|---|
| 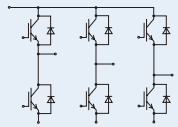 | IGBT[3] | | | | | | | | |
| | FS6R06VE3 | 600 | 6 | 11 | 1,55 | 4,60 | 3,70 | 0,30 | L_750b/89 |
| | FS10R06VE3 | 600 | 10 | 16 | 1,55 | 3,70 | 3,00 | 0,50 | L_750b/89 |
| | FS15R06VE3 | 600 | 15 | 22 | 1,55 | 3,00 | 2,30 | 0,76 | L_750b/89 |
| | FS20R06VE3 | 600 | 20 | 25 | 1,55 | 2,75 | 2,00 | 1,00 | L_750b/89 |
| | FS30R06VE3 | 600 | 30 | 34 | 1,55 | 2,35 | 1,70 | 1,60 | L_750b/89 |
| 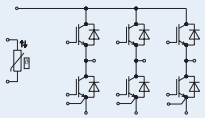 | IGBT[2] | | | | | | | | |
| | ■ FS10R06VL4_B2 | 600 | 10 | 16 | 1,95 | 2,40 | 1,80 | 0,52 | L_750c/89 |
| | ■ FS15R06VL4_B2 | 600 | 15 | 20 | 1,95 | 2,20 | 1,70 | 0,71 | L_750c/89 |
| | ■ FS10R06XL4 | 600 | 10 | 17 | 1,95 | 2,20 | 1,65 | 0,55 | L_1b/90 |
| | ■ FS15R06XL4 | 600 | 15 | 20 | 1,95 | 1,90 | 1,55 | 0,75 | L_1b/90 |
| | ■ FS20R06XL4 | 600 | 20 | 26 | 1,95 | 1,65 | 1,40 | 1,10 | L_1b/90 |
| | ■ FS30R06XL4 | 600 | 30 | 35 | 1,95 | 1,35 | 1,05 | 1,60 | L_1b/90 |
| | ■ FS50R06YL4 | 600 | 50 | 55 | 1,95 | 0,95 | 0,62 | 1,85 | L_2h/93 |
| | IGBT[3] | | | | | | | | |
| | FS6R06VE3_B2 | 600 | 6 | 11 | 1,55 | 4,60 | 3,70 | 0,25 | L_750c/89 |
| | FS10R06VE3_B2 | 600 | 10 | 16 | 1,55 | 3,70 | 3,00 | 0,50 | L_750c/89 |
| | FS15R06VE3_B2 | 600 | 15 | 22 | 1,55 | 3,00 | 2,30 | 0,76 | L_750c/89 |
| | FS20R06VE3_B2 | 600 | 20 | 25 | 1,55 | 2,75 | 2,00 | 1,00 | L_750c/89 |
| | FS10R06XE3 | 600 | 10 | 16 | 1,55 | 3,40 | 2,90 | 0,50 | L_1b/90 |
| | FS15R06XE3 | 600 | 15 | 22 | 1,55 | 2,70 | 2,10 | 0,76 | L_1b/90 |
| | FS20R06XE3 | 600 | 20 | 27 | 1,55 | 2,45 | 1,95 | 1,10 | L_1b/90 |
| | FS30R06XE3 | 600 | 30 | 37 | 1,55 | 2,00 | 1,50 | 1,40 | L_1b/90 |
| | FS50R06YE3 | 600 | 50 | 60 | 1,45 | 1,35 | 0,95 | 1,95 | L_2h/93 |
| | ◆ FS10R06WE3 | 600 | 10 | data on request | | | | | |
| | ◆ FS15R06WE3 | 600 | 15 | data on request | | | | | |
| | ◆ FS20R06WE3 | 600 | 20 | data on request | | | | | |
| | ◆ FS30R06WE3 | 600 | 30 | data on request | | | | | |
| | ◆ FS50R06WE3 | 600 | 50 | data on request | | | | | |

■ Not for new design
◆ New type
* as specified in data sheet

Mounting Hardware see page 121.

радиодетали электронные компоненты со склада и под заказ

# IGBT Low Power Modules
# EasyPACK

## 1200 $V_{CES}$

| | Type | IGBT Inverter $V_{CE}$ V | $I_C$* A $T_C = 80\,°C$ | $I_C$* A $T_C = 25\,°C$ | $V_{CEsat}$ V $T_{vj} = 25\,°C$ | $R_{thJH}$ K/W typ. | $R_{thJC}$ K/W max. | Eon + Eoff mJ $T_{vj} = 125\,°C$ | Outline / page |
|---|---|---|---|---|---|---|---|---|---|
| 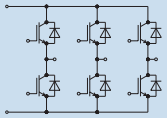 | IGBT³ | | | | | | | | |
| | FS10R12VT3 | 1200 | 10 | 16 | 1,90 | 2,40 | 1,95 | 2,35 | L_750f/89 |
| | FS15R12VT3 | 1200 | 15 | 24 | 1,70 | 1,90 | 1,45 | 3,40 | L_750f/89 |
| 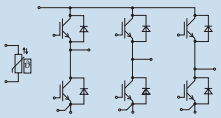 | IGBT³ | | | | | | | | |
| | FS10R12YT3 | 1200 | 10 | 16 | 1,90 | 2,05 | 1,80 | 2,30 | L_2g/93 |
| | FS15R12YT3 | 1200 | 15 | 25 | 1,70 | 1,70 | 1,30 | 3,25 | L_2g/93 |
| | FS25R12YT3 | 1200 | 25 | 40 | 1,70 | 1,15 | 0,85 | 5,40 | L_2g/93 |
| | FS35R12YT3 | 1200 | 35 | 40 | 1,70 | 0,95 | 0,62 | 7,50 | L_2g/93 |
| | ◆ FS10R12WT3 | 1200 | 10 | data on request | | | | | |
| | ◆ FS15R12WT3 | 1200 | 15 | data on request | | | | | |
| | ◆ FS25R12WT3 | 1200 | 25 | data on request | | | | | |
| | ◆ FS35R12WT3 | 1200 | 35 | data on request | | | | | |

◆ New type
* as specified in data sheet

Mounting Hardware see page 121.

г.Минск тел.8(017)2005646 www.fotorele.net модули EUPEC IGBT Infineon minsk17@tut.by



# IGBT Low Power Modules EasyDUAL

## 600 $V_{CES}$

| Type | IGBT Inverter $V_{CE}$ V | IGBT Inverter $I_C$* A | Outline / page | Remarks |
|---|---|---|---|---|
| IGBT³ | | | | |
| FF100R06YE3 | 600 | 100 | L_2j/93 | data on request |
| FF150R06YE3 | 600 | 150 | L_2j/93 | data on request |
| FF200R06YE3 | 600 | 200 | L_2j/93 | data on request |

* as specified in data sheet

## 1200 $V_{CES}$

| Type | IGBT Inverter $V_{CE}$ V | IGBT Inverter $I_C$* A | Outline / page | Remarks |
|---|---|---|---|---|
| IGBT³ | | | | |
| FF75R12YT3 | 1200 | 75 | L_2j/93 | data on request |
| FF100R12YT3 | 1200 | 100 | L_2j/93 | data on request |
| FF150R12YT3 | 1200 | 150 | L_2j/93 | data on request |

* as specified in data sheet

# IGBT Low Power Modules EasyFourPACK

## 600 $V_{CES}$

| Type | IGBT Inverter $V_{CE}$ V | IGBT Inverter $I_C$* A | Outline / page | Remarks |
|---|---|---|---|---|
| IGBT³ | | | | |
| ◆ F4-30R06WE3 | 600 | 30 | tbd. | data on request |
| ◆ F4-50R06WE3 | 600 | 50 | tbd. | data on request |
| ◆ F4-75R06WE3 | 600 | 75 | tbd. | data on request |

◆ New type

* as specified in data sheet

радиодетали электронные компоненты со склада и под заказ

# IGBT Medium Power Modules
# EconoPIM™ Power Integrated Modules

## 600 $V_{CES}$

| Type | IGBT Inverter | | | | Rectifier Diodes | | | | Brake Chopper | | | Outline / page |
|---|---|---|---|---|---|---|---|---|---|---|---|---|
| | $V_{CES}$ V | $I_C$ A | $R_{thJC}$ K/W | $V_{CEsat}$ V $T_{vj}$ = 25°C | $V_{RRM}$ V | $I_d$ A $T_C$ = 80°C | $R_{thJC}$ K/W | $V_f$ V $T_{vj}$ = 150°C | $V_{CES}$ V | $I_{C,IGBT}$ A $T_c$ = 80°C | $R_{thJC}$ K/W | |
| IGBT[2] | | | | | | | | | | | | |
| ■ BSM10GP60 | 600 | 10 | 1,5 | 1,95 | 1600 | 10 | 1,00 | 0,9 | 600 | 10 | 1,5 | M_E2a/94 |
| ■ BSM15GP60 | 600 | 15 | 1,3 | 1,95 | 1600 | 15 | 1,00 | 0,95 | 600 | 10 | 1,5 | M_E2a/94 |
| ■ BSM20GP60 | 600 | 20 | 1,0 | 1,95 | 1600 | 20 | 1,00 | 1,0 | 600 | 10 | 1,5 | M_E2a/94 |
| ■ BSM30GP60 | 600 | 30 | 0,7 | 1,95 | 1600 | 30 | 1,00 | 1,1 | 600 | 15 | 1,3 | M_E2a/94 |
| ■ BSM50GP60 | 600 | 50 | 0,5 | 1,95 | 1600 | 50 | 1,00 | 1,3 | 600 | 25 | 1,0 | M_E2a/94 |
| ■ BSM50GP60G | 600 | 50 | 0,5 | 1,95 | 1600 | 50 | 1,00 | 1,3 | 600 | 25 | 1,0 | M_E3a/94 |
| ■ BSM75GP60 | 600 | 75 | 0,4 | 1,95 | 1600 | 75 | 0,65 | 1,15 | 600 | 37,5 | 0,7 | M_E3a/94 |
| ■ BSM100GP60 | 600 | 100 | 0,3 | 1,95 | 1600 | 100 | 0,50 | 1,16 | 600 | 50 | 0,5 | M_E3a/94 |
| ◆ FP30R06KE3 | 600 | 30 | on request | on request | on request | on request | on request | on request | 600 | on request | on request | M_E2a/94 |
| ◆ FP50R06KE3 | 600 | 50 | on request | on request | on request | on request | on request | on request | 600 | on request | on request | M_E2a/94 |
| ◆ FP50R06KE3G | 600 | 50 | on request | on request | on request | on request | on request | on request | 600 | on request | on request | M_E3a/94 |
| ◆ FP75R06KE3 | 600 | 75 | on request | on request | on request | on request | on request | on request | 600 | on request | on request | M_E3a/94 |
| ◆ FP100R06KE3 | 600 | 100 | on request | on request | on request | on request | on request | on request | 600 | on request | on request | M_E3a/94 |

■ Not for new design
◆ New type



радиодетали электронные компоненты со склада и под заказ

г.Минск тел.8(017)2005646 www.fotorele.net модули EUPEC IGBT Infineon minsk17@tut.by



# IGBT Medium Power Modules
# EconoPIM™ Power Integrated Modules

## 1200 $V_{CES}$

| Type | IGBT Inverter $V_{CES}$ V | IGBT Inverter $I_C$ A | IGBT Inverter $R_{thJC}$ K/W | IGBT Inverter $V_{CEsat}$ V $T_{vj}$ = 25°C | Rectifier Diodes $V_{RRM}$ V | Rectifier Diodes $I_d$ A $T_C$ = 80°C | Rectifier Diodes $R_{thJC}$ K/W | Rectifier Diodes $V_f$ V $T_{vj}$ = 150°C | Brake Chopper $V_{CES}$ V | Brake Chopper $I_{C,IGBT}$ A $T_c$ = 80°C | Brake Chopper $R_{thJC}$ K/W | Outline / page |
|---|---|---|---|---|---|---|---|---|---|---|---|---|
| IGBT[2] | | | | | | | | | | | | |
| ■ BSM10GP120 | 1200 | 10 | 1,20 | 2,40 | 1600 | 10 | 1,00 | 0,9 | 1200 | 10,0 | 1,2 | M_E2a/94 |
| ■ BSM15GP120 | 1200 | 15 | 0,70 | 2,20 | 1600 | 15 | 1,00 | 0,95 | 1200 | 10,0 | 1,2 | M_E2a/94 |
| ■ BSM25GP120 | 1200 | 25 | 0,55 | 2,10 | 1600 | 25 | 1,00 | 1,05 | 1200 | 12,5 | 1,2 | M_E2a/94 |
| ■ BSM35GP120 | 1200 | 35 | 0,55 | 2,40 | 1600 | 35 | 1,00 | 1,15 | 1200 | 17,5 | 0,7 | M_E2a/94 |
| ■ BSM35GP120G | 1200 | 35 | 0,55 | 2,40 | 1600 | 35 | 1,00 | 1,15 | 1200 | 17,5 | 0,7 | M_E3a/94 |
| ■ BSM50GP120 | 1200 | 50 | 0,35 | 2,20 | 1600 | 50 | 0,65 | 1,05 | 1200 | 25,0 | 0,55 | M_E3a/94 |
| IGBT[2] Short Tail | | | | | | | | | | | | |
| FP15R12KS4C | 1200 | 15 | 0,70 | 3,20 | 1600 | 15 | 1,00 | 0,95 | 1200 | 10,0 | 1,2 | M_E2a/94 |
| FP25R12KS4C | 1200 | 25 | 0,55 | 3,20 | 1600 | 25 | 1,00 | 1,05 | 1200 | 12,5 | 1,2 | M_E2a/94 |
| FP50R12KS4C | 1200 | 50 | 0,35 | 3,20 | 1600 | 50 | 0,65 | 1,05 | 1200 | 25,0 | 0,55 | M_E3a/94 |
| IGBT[3] | | | | | | | | | | | | |
| FP15R12KE3G | 1200 | 15 | 1,20 | 1,70 | 1600 | 15 | 1,00 | 0,95 | 1200 | 10,0 | 1,5 | M_E2a/94 |
| FP25R12KE3 | 1200 | 25 | 0,80 | 1,70 | 1600 | 25 | 1,00 | 1,05 | 1200 | 15,0 | 1,2 | M_E2a/94 |
| FP40R12KE3 | 1200 | 40 | 0,60 | 1,80 | 1600 | 40 | 1,00 | 1,2 | 1200 | 15,0 | 1,2 | M_E2a/94 |
| FP40R12KE3G | 1200 | 40 | 0,60 | 1,80 | 1600 | 40 | 1,00 | 1,2 | 1200 | 40,0 | 0,6 | M_E3a/94 |
| FP50R12KE3 | 1200 | 50 | 0,45 | 1,70 | 1600 | 50 | 0,65 | 1,0 | 1200 | 40,0 | 0,6 | M_E3a/94 |
| FP75R12KE3 | 1200 | 75 | 0,35 | 1,70 | 1600 | 75 | 0,65 | 1,15 | 1200 | 40,0 | 0,6 | M_E3a/94 |
| Fast IGBT[3] | | | | | | | | | | | | |
| FP15R12KT3 | 1200 | 15 | 1,20 | 1,70 | 1600 | 15 | 1,00 | 0,9 | 1200 | 10,0 | 1,5 | M_E2a/94 |
| FP25R12KT3 | 1200 | 25 | 0,80 | 1,70 | 1600 | 25 | 1,00 | 1,05 | 1200 | 15,0 | 1,2 | M_E2a/94 |
| FP40R12KT3 | 1200 | 40 | 0,60 | 1,80 | 1600 | 40 | 1,00 | 1,2 | 1200 | 15,0 | 1,2 | M_E2a/94 |
| FP40R12KT3G | 1200 | 40 | 0,60 | 1,80 | 1600 | 40 | 1,00 | 1,2 | 1200 | 40,0 | 0,60 | M_E3a/94 |
| FP50R12KT3 | 1200 | 50 | 0,45 | 1,70 | 1600 | 50 | 0,65 | 1,0 | 1200 | 40,0 | 0,60 | M_E3a/94 |
| FP75R12KT3 | 1200 | 75 | 0,35 | 1,70 | 1600 | 75 | 0,65 | 1,1 | 1200 | 40,0 | 0,60 | M_E3a/94 |
| ◆ FP10R12NT3 | 1200 | 10 | 1,5 | 1,9 | 1600 | 50 | 1,0 | 0,95 | 1200 | 10,0 | 1,5 | M_E1a/94 |
| ◆ FP15R12NT3 | 1200 | 15 | 1,2 | 1,7 | 1600 | 50 | 1,0 | 1,00 | 1200 | 15,0 | 1,2 | M_E1a/94 |

■ Not for new design
◆ New type

радиодетали электронные компоненты со склада и под заказ

# IGBT Medium Power Modules
# EconoPACK™

## 600 V – Type

| | Type | $V_{CES}$ V | $I_C$ A | $V_{CEsat}$ V $T_{vj}$=25°C typ. | $P_{tot}$ W | $R_{thJC}$ K/W ≤ | Outline / page |
|---|---|---|---|---|---|---|---|
| 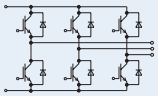 | IGBT[2] | | | | | | |
| | ■ BSM20GD60DLC | 600 | 20 | 1,95 | 125 | 1,0 | M_E2d/95 |
| | ■ BSM20GD60DLCE3224 | 600 | 20 | 1,95 | 125 | 1,0 | M_E2c/95 |
| | ■ BSM30GD60DLC | 600 | 30 | 1,95 | 135 | 0,9 | M_E2d/95 |
| | ■ BSM30GD60DLCE3224 | 600 | 30 | 1,95 | 135 | 0,9 | M_E2c/95 |
| | ■ BSM50GD60DLC | 600 | 50 | 1,95 | 250 | 0,5 | M_E2c/95 |
| | ■ BSM50GD60DLCE3226 | 600 | 50 | 1,95 | 250 | 0,5 | M_E2d/95 |
| | ■ BSM75GD60DLC | 600 | 75 | 1,95 | 330 | 0,37 | M_E2c/95 |
| | ■ BSM100GD60DLC | 600 | 100 | 1,95 | 430 | 0,29 | M_E3c/95 |
| | ■ BSM150GD60DLC | 600 | 150 | 1,95 | 570 | 0,22 | M_E3c/95 |
| | ■ BSM200GD60DLC | 600 | 200 | 1,95 | 700 | 0,18 | M_E3c/95 |
| 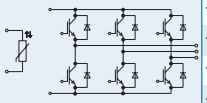 | IGBT[3] | | | | | | |
| | ◆ FS50R06KE3 | 600 | 50 | 1,45 | 190 | 0,8 | M_E2b/94 |
| | ◆ FS75R06KE3 | 600 | 75 | 1,45 | 250 | 0,6 | M_E2b/94 |
| | ◆ FS100R06KE3 | 600 | 100 | 1,45 | 335 | 0,45 | M_E3b/94 |
| | ◆ FS150R06KE3 | 600 | 150 | 1,45 | 430 | 0,35 | M_E3b/94 |
| 3-Phase-Full-Bridges | ◆ FS200R06KE3 | 600 | 200 | 1,45 | 600 | 0,25 | W_E3b/94 |
| 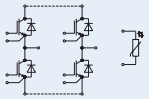 | IGBT[2] | | | | | | |
| | F4-100R06KL4 | 600 | 100 | 1,95 | 430 | 0,29 | M_E2e/95 |
| | F4-150R06KL4 | 600 | 150 | 1,95 | 570 | 0,22 | M_E2e/95 |
| | F4-200R06KL4 | 600 | 200 | 1,95 | 700 | 0,18 | M_E3d/95 |

■ Not for new design
◆ New type

## 1200 V – Type

| | Type | $V_{CES}$ V | $I_C$ A | $V_{CEsat}$ V $T_{vj}$=25°C typ. | $P_{tot}$ W | $R_{thJC}$ K/W ≤ | Outline / page |
|---|---|---|---|---|---|---|---|
| 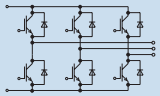 | IGBT[2] | | | | | | |
| | BSM10GD120DN2 | 1200 | 10 | 2,7 | 80 | 1,52 | M_E2d/95 |
| | BSM10GD120DN2E3224 | 1200 | 10 | 2,7 | 80 | 1,52 | M_E2c/95 |
| | BSM15GD120DN2 | 1200 | 15 | 2,5 | 145 | 0,86 | M_E2d/95 |
| | BSM15GD120DN2E3224 | 1200 | 15 | 2,5 | 145 | 0,86 | M_E2c/95 |
| | BSM25GD120DN2 | 1200 | 25 | 2,5 | 200 | 0,6 | M_E2d/95 |
| | BSM25GD120DN2E3224 | 1200 | 25 | 2,5 | 200 | 0,6 | M_E2c/95 |
| | BSM35GD120DN2 | 1200 | 35 | 2,7 | 280 | 0,44 | M_E2d/95 |
| | BSM35GD120DN2E3224 | 1200 | 35 | 2,7 | 280 | 0,44 | M_E2c/95 |
| | BSM50GD120DN2 | 1200 | 50 | 2,5 | 350 | 0,35 | M_E2c/95 |
| | BSM50GD120DN2E3226 | 1200 | 50 | 2,5 | 350 | 0,35 | M_E2d/95 |
| | BSM50GD120DN2G | 1200 | 50 | 2,5 | 400 | 0,35 | M_E3c/95 |
| | BSM75GD120DN2 | 1200 | 75 | 2,5 | 520 | 0,235 | M_E3c/95 |
| | BSM100GD120DN2 | 1200 | 100 | 2,5 | 680 | 0,182 | M_E3c/95 |
| | IGBT[2] Low Loss | | | | | | |
| | ■ BSM15GD120DLCE3224 | 1200 | 15 | 2,1 | 145 | 0,86 | M_E2c/95 |
| | ■ BSM25GD120DLCE3224 | 1200 | 25 | 2,1 | 200 | 0,6 | M_E2c/95 |
| | ■ BSM35GD120DLCE3224 | 1200 | 35 | 2,1 | 280 | 0,44 | M_E2c/95 |
| | ■ BSM50GD120DLC | 1200 | 50 | 2,1 | 350 | 0,35 | M_E2c/95 |
| | ■ BSM75GD120DLC | 1200 | 75 | 2,1 | 500 | 0,25 | M_E3c/95 |
| 3-Phase-Full-Bridges | ■ BSM100GD120DLC | 1200 | 100 | 2,1 | 650 | 0,19 | M_E3c/95 |
| 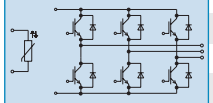 | IGBT[3] | | | | | | |
| | FS25R12KE3G | 1200 | 25 | 1,7 | 145 | 0,86 | M_E2b/94 |
| | FS35R12KE3G | 1200 | 35 | 1,7 | 200 | 0,60 | M_E2b/94 |
| | FS50R12KE3 | 1200 | 50 | 1,7 | 270 | 0,45 | M_E2b/94 |
| | FS75R12KE3 | 1200 | 75 | 1,7 | 350 | 0,35 | M_E2b/94 |
| | FS75R12KE3G | 1200 | 75 | 1,7 | 350 | 0,35 | M_E3b/94 |
| | FS100R12KE3 | 1200 | 100 | 1,7 | 480 | 0,26 | M_E3b/94 |
| 3-Phase-Full-Bridges | FS150R12KE3 | 1200 | 150 | 1,7 | 700 | 0,18 | M_E3b/94 |

г.Минск тел.8(017)2005646 www.fotorele.net модули EUPEC IGBT Infineon minsk17@tut.by



# IGBT Medium Power Modules
# EconoPACK™

## 1200 V – Type

| | Type | $V_{CES}$ V | $I_C$ A | $V_{CEsat}$ V $T_{vj}$=25°C typ. | $P_{tot}$ W | $R_{thJC}$ K/W ≤ | Outline / page |
|---|---|---|---|---|---|---|---|
| 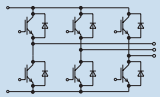 3-Phase-Full-Bridges | IGBT[2] | | | | | | |
| | FS75R12KS4 | 1200 | 75 | 3,2 | 500 | 0,25 | M_E3c/95 |
| | FS100R12KS4 | 1200 | 100 | 3,2 | 660 | 0,19 | M_E3c/95 |
| 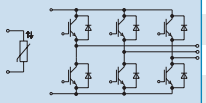 3-Phase-Full-Bridges | Fast IGBT[3] | | | | | | |
| | FS25R12NT3 | 1200 | 25 | on request | on request | on request | M_E1b/94 |
| | FS35R12NT3 | 1200 | 35 | on request | on request | on request | M_E1b/94 |
| | FS25R12KT3 | 1200 | 25 | 1,7 | 145 | 0,86 | M_E2b/94 |
| | FS35R12KT3 | 1200 | 35 | 1,7 | 210 | 0,60 | M_E2b/94 |
| | FS50R12KT3 | 1200 | 50 | 1,7 | 280 | 0,45 | M_E2b/94 |
| | FS75R12KT3 | 1200 | 75 | 1,7 | 355 | 0,35 | M_E2b/94 |
| | FS75R12KT3G | 1200 | 75 | 1,7 | 355 | 0,35 | M_E3b/94 |
| | FS100R12KT3 | 1200 | 100 | 1,7 | 480 | 0,26 | M_E3b/94 |
| | FS150R12KT3 | 1200 | 150 | 1,7 | 700 | 0,18 | M_E3b/94 |
| 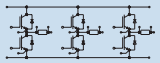 Full Bridges with Shunts | IGBT[3] | | | | | | |
| | ◆ FS75R12KE3_B3 | 1200 | 75 | 1,7 | 355 | 0,35 | M_E3g/96 |
| | ◆ FS100R12KE3_B3 | 1200 | 100 | 1,7 | 480 | 0,26 | M_E3g/96 |

■ Not for new design
◆ New type

## 1200 V – Type

| | Type | $V_{CES}$ V | $I_C$ A | $V_{CEsat}$ V $T_{vj}$=25°C typ. | $P_{tot}$ W | $R_{thJC}$ K/W ≤ | Outline / page |
|---|---|---|---|---|---|---|---|
| 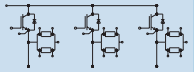 TriPACK High with Shunts | IGBT[3] | | | | | | |
| | ◆ FT150R12KE3G_B4 | 1200 | 150 | 1,7 | 700 | 0,18 | M_E3h/96 |
| 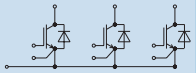 TriPACK Low | ◆ FT150R12KE3_B5 | 1200 | 150 | 1,7 | 700 | 0,18 | M_E2f/96 |
| 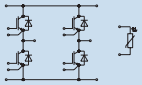 FourPACK | Short Tail | | | | | | |
| | ◆ F4-25R12NS4 | 1200 | 25 | 3,2 | 210 | 0,6 | M_E1c/95 |
| | ◆ F4-35R12NS4 | 1200 | 35 | 3,4 | 250 | 0,5 | M_E1c/95 |
| 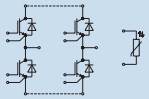 | ◆ F4-50R12KS4 | 1200 | 50 | 3,2 | 355 | 0,35 | M_E2e/95 |
| | ◆ F4-75R12KS4 | 1200 | 75 | 3,2 | 500 | 0,25 | M_E2e/95 |
| | ◆ F4-100R12KS4 | 1200 | 100 | 3,2 | 660 | 0,19 | M_E3d/95 |
| | ◆ F4-150R12KS4 | 1200 | 150 | 3,2 | 960 | 0,13 | M_E3d/95 |

радиодетали электронные компоненты со склада и под заказ

# IGBT Medium Power Modules
# EconoPACK™

## 1700 V – Type

| | Type | $V_{CES}$ V | $I_C$ A | $V_{CEsat}$ V $T_{vj}$=25°C typ. | $P_{tot}$ W | $R_{thJC}$ K/W ≤ | Outline / page |
|---|---|---|---|---|---|---|---|
| 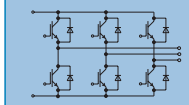 3-Phase-Full-Bridges | IGBT[2] Low Loss | | | | | | |
| | ■ BSM50GD170DL | 1700 | 50 | 2,7 | 480 | 0,26 | M_E3c/95 |
| | ■ BSM75GD170DL | 1700 | 75 | 2,7 | 625 | 0,20 | M_E3c/95 |
| | IGBT[3] | | | | | | |
| | ◆ FS50R17KE3_B17 | 1700 | 50 | 2,0 | 345 | 0,36 | M_2g/96 |
| | ◆ FS75R17KE3 | 1700 | 75 | 2,0 | 465 | 0,27 | M_E3b/94 |
| | ◆ FS100R17KE3 | 1700 | 100 | 2,0 | 555 | 0,225 | M_E3b/94 |

# 34 mm and 62 mm Modules

## 600 V – Type

| | Type | $V_{CES}$ V | $I_C$ A | $V_{CEsat}$ V $T_{vj}$=25°C typ. | $P_{tot}$ W | $R_{thJC}$ K/W ≤ per arm | Outline / page |
|---|---|---|---|---|---|---|---|
| 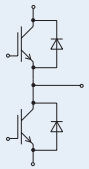 Dual Modules | Standard | | | | | | |
| | BSM50GB60DLC | 600 | 50 | 1,95 | 280 | 0,44 | M_34a/97 |
| | BSM75GB60DLC | 600 | 75 | 1,95 | 355 | 0,35 | M_34a/97 |
| | BSM100GB60DLC | 600 | 100 | 1,95 | 445 | 0,28 | M_34a/97 |
| | BSM150GB60DLC | 600 | 150 | 1,95 | 595 | 0,21 | M_34a/97 |
| | BSM200GB60DLC | 600 | 200 | 1,95 | 730 | 0,17 | M_34a/97 |
| | BSM300GB60DLC | 600 | 300 | 1,95 | 1250 | 0,10 | M_62a/97 |
| | IGBT3 | | | | | | |
| | ◆ FF200R06KE3 | 600 | 200 | 1,45 | 680 | 0,22 | M_62a/97 |
| | ◆ FF300R06KE3 | 600 | 300 | 1,45 | 940 | 0,16 | M_62a/97 |
| | ◆ FF400R06KE3 | 600 | 400 | 1,45 | 1250 | 0,12 | M_62a/97 |

◆ New type
■ Not for new design

# 34 mm and 62 mm Modules

## 1200 V – Type

| | Type | $V_{CES}$ V | $I_C$ A | $V_{CEsat}$ V $T_{vj}$=25°C typ. | $P_{tot}$ W | $R_{thJC}$ K/W ≤ per arm | Outline / page |
|---|---|---|---|---|---|---|---|
| 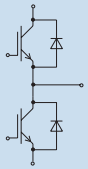 Dual Modules | Standard 2. Generation | | | | | | |
| | BSM25GB120DN2 | 1200 | 25 | 2,5 | 200 | 0,6 | M_34a/97 |
| | BSM35GB120DN2 | 1200 | 35 | 2,7 | 280 | 0,44 | M_34a/97 |
| | BSM50GB120DN2 | 1200 | 50 | 2,5 | 400 | 0,3 | M_34a/97 |
| | BSM75GB120DN2 | 1200 | 75 | 2,5 | 625 | 0,2 | M_34a/97 |
| | BSM100GB120DN2K | 1200 | 100 | 2,5 | 700 | 0,18 | M_34a/97 |
| | BSM100GB120DN2 | 1200 | 100 | 2,5 | 800 | 0,16 | M_62a/97 |
| | BSM150GB120DN2 | 1200 | 150 | 2,5 | 1250 | 0,1 | M_62a/97 |
| | BSM200GB120DN2 | 1200 | 200 | 2,5 | 1400 | 0,09 | M_62a/97 |
| | Low Loss 2. Generation | | | | | | |
| | BSM50GB120DLC | 1200 | 50 | 2,1 | 460 | 0,27 | M_34a/97 |
| | BSM75GB120DLC | 1200 | 75 | 2,1 | 690 | 0,18 | M_34a/97 |
| | BSM100GB120DLCK | 1200 | 100 | 2,1 | 830 | 0,15 | M_34a/97 |
| | BSM100GB120DLC | 1200 | 100 | 2,1 | 780 | 0,16 | M_62a/97 |
| | BSM150GB120DLC | 1200 | 150 | 2,1 | 1200 | 0,1 | M_62a/97 |
| | BSM200GB120DLC | 1200 | 200 | 2,1 | 1300 | 0,08 | M_62a/97 |
| | BSM300GB120DLC | 1200 | 300 | 2,1 | 2500 | 0,05 | M_62a/97 |
| | IGBT[3] | | | | | | |
| | FF150R12KE3G | 1200 | 150 | 1,7 | 780 | 0,16 | M_62a/97 |
| | FF200R12KE3 | 1200 | 200 | 1,7 | 1040 | 0,12 | M_62a/97 |
| | FF300R12KE3 | 1200 | 300 | 1,7 | 1450 | 0,085 | M_62a/97 |
| | FF400R12KE3 | 1200 | 400 | 1,7 | 2000 | 0,062 | M_62a/97 |
| | Fast IGBT[3] | | | | | | |
| | ◆ FF150R12KT3G | 1200 | 150 | 1,7 | 780 | 0,16 | M_62a/97 |
| | ◆ FF200R12KT3 | 1200 | 200 | 1,7 | 1050 | 0,12 | M_62a/97 |
| | ◆ FF300R12KT3 | 1200 | 300 | 1,7 | 1450 | 0,085 | M_62a/97 |
| | ◆ FF400R12KT3 | 1200 | 400 | 1,7 | 2000 | 0,062 | M_62a/97 |



радиодетали электронные компоненты со склада и под заказ

г.Минск тел.8(017)2005646 www.fotorele.net модули EUPEC IGBT Infineon minsk17@tut.by



# IGBT Medium Power Modules
## 34 mm and 62 mm Modules

### 1200 V – Type

| | Type | $V_{CES}$ V | $I_C$ A | $V_{CEsat}$ V $T_{vj}$=25°C typ. | $P_{tot}$ W | $R_{thJC}$ K/W ≤ per arm | Outline / page |
|---|---|---|---|---|---|---|---|
| Dual Modules | Short Tail | | | | | | |
| | FF100R12KS4 | 1200 | 100 | 3,2 | 780 | 0,16 | M_62a/97 |
| | FF150R12KS4 | 1200 | 150 | 3,2 | 1200 | 0,1 | M_62a/97 |
| | FF200R12KS4 | 1200 | 200 | 3,2 | 1400 | 0,09 | M_62a/97 |
| | FF300R12KS4 | 1200 | 300 | 3,2 | 1950 | 0,06 | M_62a/97 |
| GAL Chopper | Standard 2. Generation | | | | | | |
| | BSM50GAL120DN2 | 1200 | 50 | 2,5 | 400 | 0,3 | M_34a/97 |
| | BSM75GAL120DN2 | 1200 | 75 | 2,5 | 625 | 0,2 | M_34a/97 |
| | BSM100GAL120DN2 | 1200 | 100 | 2,5 | 800 | 0,16 | M_62a/97 |
| | BSM150GAL120DN2 | 1200 | 150 | 2,5 | 1250 | 0,1 | M_62a/97 |
| | BSM200GAL120DN2 | 1200 | 200 | 2,5 | 1400 | 0,09 | M_62a/97 |
| | Low Loss 2. Generation | | | | | | |
| | BSM100GAL120DLCK | 1200 | 100 | 2,1 | 830 | 0,15 | M_34a/97 |
| | BSM150GAL120DLC | 1200 | 150 | 2,1 | 1200 | 0,1 | M_62a/97 |
| | BSM200GAL120DLC | 1200 | 200 | 2,1 | 1300 | 0,09 | M_62a/97 |
| | BSM300GAL120DLC | 1200 | 300 | 2,1 | 2500 | 0,05 | M_62a/97 |
| | IGBT³ | | | | | | |
| | FD200R12KE3 | 1200 | 200 | 1,7 | 1040 | 0,12 | M_62a/97 |
| | FD300R12KE3 | 1200 | 300 | 1,7 | 1450 | 0,085 | M_62a/97 |
| | ◆ FD400R12KE3 | 1200 | 400 | 1,7 | 2000 | 0,062 | M_62a/97 |
| GAR Chopper | Standard 2. Generation | | | | | | |
| | BSM75GAR120DN2 | 1200 | 75 | 2,5 | 625 | 0,2 | M_34a/97 |
| | BSM100GAR120DN2 | 1200 | 100 | 2,5 | 800 | 0,16 | M_62a/97 |
| | BSM150GAR120DN2 | 1200 | 150 | 2,5 | 1250 | 0,1 | M_62a/97 |
| | BSM200GAR120DN2 | 1200 | 200 | 2,5 | 1400 | 0,09 | M_62a/97 |
| | Low Loss 2. Generation | | | | | | |
| | BSM300GAR120DLC | 1200 | 300 | 2,1 | 2500 | 0,05 | M_62a/97 |
| | IGBT³ | | | | | | |
| | DF200R12KE3 | 1200 | 200 | 1,7 | 1040 | 0,12 | M_62a/97 |
| | DF300R12KE3 | 1200 | 300 | 1,7 | 1450 | 0,085 | M_62a/97 |
| | ◆ DF400R12KE3 | 1200 | 400 | 1,7 | 2000 | 0,062 | M_62a/97 |

## 34 mm and 62 mm Modules

### 1200 V – Type

| | Type | $V_{CES}$ V | $I_C$ A | $V_{CEsat}$ V $T_{vj}$=25°C typ. | $P_{tot}$ W | $R_{thJC}$ K/W ≤ | Outline / page |
|---|---|---|---|---|---|---|---|
| Single Switches | Standard 2. Generation | | | | | | |
| | BSM200GA120DN2 | 1200 | 200 | 2,5 | 1550 | 0,08 | M_62b/97 |
| | BSM200GA120DN2F | | | | | | |
| | BSM200GA120DN2S | 1200 | 200 | 2,5 | 1550 | 0,08 | M_62c/97 |
| | BSM300GA120DN2 | 1200 | 300 | 2,5 | 2500 | 0,05 | M_62b/97 |
| | BSM300GA120DN2FS | | | | | | |
| | BSM300GA120DN2S | 1200 | 300 | 2,5 | 2500 | 0,05 | M_62c/97 |
| | BSM400GA120DN2 | 1200 | 400 | 2,5 | 2700 | 0,045 | M_62b/97 |
| | BSM400GA120DN2F | | | | | | |
| | BSM400GA120DN2S | 1200 | 400 | 2,5 | 2700 | 0,045 | M_62c/97 |
| | Low Loss 2. Generation | | | | | | |
| | BSM200GA120DLC | 1200 | 200 | 2,1 | 1470 | 0,09 | M_62b/97 |
| | BSM200GA120DLCS | 1200 | 200 | 2,1 | 1470 | 0,09 | M_62c/97 |
| | BSM300GA120DLC | 1200 | 300 | 2,1 | 2270 | 0,055 | M_62b/97 |
| | BSM300GA120DLCS | 1200 | 300 | 2,1 | 2270 | 0,055 | M_62c/97 |
| | BSM400GA120DLC | 1200 | 400 | 2,1 | 2500 | 0,05 | M_62b/97 |
| | BSM400GA120DLCS | 1200 | 400 | 2,1 | 2500 | 0,05 | M_62c/97 |
| | BSM600GA120DLC | 1200 | 600 | 2,1 | 3900 | 0,032 | M_62b/97 |
| | BSM600GA120DLCS | 1200 | 600 | 2,1 | 3900 | 0,03 | M_62c/97 |
| | IGBT³ | | | | | | |
| | FZ300R12KE3G | 1200 | 300 | 1,7 | 1450 | 0,085 | M_62b/97 |
| | FZ300R12KE3_B1G | 1200 | 300 | 1,7 | 1450 | 0,085 | M_62c/97 |
| | FZ400R12KE3 | 1200 | 400 | 1,7 | 2250 | 0,055 | M_62b/97 |
| | FZ400R12KE3_B1 | 1200 | 400 | 1,7 | 2250 | 0,055 | M_62c/97 |
| | FZ600R12KE3 | 1200 | 600 | 1,7 | 2750 | 0,045 | M_62b/97 |
| | FZ600R12KE3_B1 | 1200 | 600 | 1,7 | 2750 | 0,045 | M_62c/97 |
| | FZ800R12KE3 | 1200 | 800 | 1,7 | 3550 | 0,035 | M_62b/97 |
| | Short Tail | | | | | | |
| | FZ400R12KS4 | 1200 | 400 | 3,2 | 2500 | 0,05 | M_62b/97 |
| | FZ600R12KS4 | 1200 | 600 | 3,2 | 3900 | 0,03 | M_62b/97 |

◆New type

радиодетали электронные компоненты со склада и под заказ

# IGBT Medium Power Modules
# 34 mm and 62 mm Modules

## 1700 V – Type

| | Type | $V_{CES}$ V | $I_C$ A | $V_{CEsat}$ V $T_{vj}$=25°C typ. | $P_{tot}$ W | $R_{thJC}$ K/W ≤ per arm | Outline / page |
|---|---|---|---|---|---|---|---|
| Dual Modules | Standard | | | | | | |
| | BSM50GB170DN2 | 1700 | 50 | 3,4 | 500 | 0,25 | M_34a/97 |
| | BSM75GB170DN2 | 1700 | 75 | 3,4 | 625 | 0,20 | M_34a/97 |
| | BSM100GB170DN2 | 1700 | 100 | 3,4 | 1000 | 0,13 | M_62a/97 |
| | BSM150GB170DN2 | 1700 | 150 | 3,4 | 1250 | 0,10 | M_62a/97 |
| | Low Loss | | | | | | |
| | BSM100GB170DLC | 1700 | 100 | 2,6 | 960 | 0,13 | M_62a/97 |
| | BSM150GB170DLC | 1700 | 150 | 2,6 | 1250 | 0,10 | M_62a/97 |
| | BSM200GB170DLC | 1700 | 200 | 2,6 | 1660 | 0,075 | M_62a/97 |
| | IGBT³ | | | | | | |
| | FF200R17KE3 | 1700 | 200 | 2,0 | 1250 | 0,100 | M_62a/97 |
| | FF300R17KE3 | 1700 | 300 | 2,0 | 1470 | 0,085 | M_62a/97 |
| Single Switches | Standard | | | | | | |
| | BSM200GA170DN2 | 1700 | 200 | 3,4 | 1750 | 0,070 | M_62b/97 |
| | BSM200GA170DN2S | 1700 | 200 | 3,4 | 1750 | 0,070 | M_62c/97 |
| | BSM300GA170DN2 | 1700 | 300 | 3,4 | 2500 | 0,050 | M_62b/97 |
| | BSM300GA170DN2S | 1700 | 300 | 3,4 | 2500 | 0,050 | M_62c/97 |
| | Low Loss | | | | | | |
| | BSM200GA170DLC | 1700 | 200 | 2,6 | 1920 | 0,065 | M_62b/97 |
| | BSM300GA170DLC | 1700 | 300 | 2,6 | 2500 | 0,050 | M_62b/97 |
| | BSM400GA170DLC | 1700 | 400 | 2,6 | 3120 | 0,040 | M_62b/97 |
| | IGBT³ | | | | | | |
| | FZ400R17KE3 | 1700 | 400 | 2,0 | 2270 | 0,055 | M_62b/97 |
| | FZ600R17KE3 | 1700 | 600 | 2,0 | 3120 | 0,040 | M_62b/97 |

## Diode Modules

| | Type | $V_{CES}$ V | $I_F$ A | $V_F$ V $T_{vj}$=25°C typ. | $Q_R$ µAs typ | $R_{thJC}$ K/W ≤ | Outline / page |
|---|---|---|---|---|---|---|---|
| Single Diodes | BYM300A120DN2 | 1200 | 300 | 2,3 | 40 | 0,125 | M_62d/97 |
| | BYM300A170DN2 | 1700 | 250 | 2,3 | 70 | 0,170 | M_62d/97 |
| | BYM600A170DN2 | 1700 | 400 | 2,0 | 100 | 0,090 | M_62d/97 |
| Dual Diodes | BYM200B170DN2 | 1700 | 200 | 2,2 | 50 | 0,150 | M_62e/97 |
| | BYM300B170DN2 | 1700 | 300 | 2,2 | 75 | 0,120 | M_62e/97 |

## 1200 V – Type

| | Type | $V_{CES}$ V | $I_C$ A | $V_{CEsat}$ V $T_{vj}$=25°C typ. | $P_{tot}$ W | $R_{thJC}$ K/W ≤ | Outline / page |
|---|---|---|---|---|---|---|---|
| Single Switches with Series Diode | ◆FD400R12KE3_B5 | 1200 | 400 | 1,7 | 2000 | 0,062 | M_62a/97 |
| | ◆FD300R12KS4_B5 | 1200 | 300 | 3,2 | 1950 | 0,064 | M_62a/97 |

◆New type



радиодетали электронные компоненты со склада и под заказ

г.Минск тел.8(017)2005646 www.fotorele.net модули EUPEC IGBT Infineon minsk17@tut.by



# IGBT Medium Power Modules
# EconoPACK™+

| 1200 $V_{CES}$ | | | | | | | |
|---|---|---|---|---|---|---|---|
| | Type | $V_{CES}$ V | $I_C$ A | $V_{CEsat}$ V $T_{vj}$=25 °C typ. | $E_{on}/E_{off}$ mWs $T_{vj}$=125 °C typ. | $R_{thJC}$ K/W | Outline / page |
| 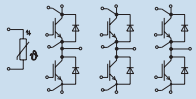 3-Phase-Full-Bridges | IGBT³ | | | | | | |
| | FS150R12KE3G | 1200 | 150 | 1,7 | 11/24 | 0,18 | M_E+a/98 |
| | FS225R12KE3 | 1200 | 225 | 1,7 | 15/36 | 0,11 | M_E+a/98 |
| | FS300R12KE3 | 1200 | 300 | 1,7 | 22/43 | 0,085 | M_E+a/98 |
| | FS450R12KE3 | 1200 | 450 | 1,7 | 33/65 | 0,06 | M_E+a/98 |

| 1700 $V_{CES}$ | | | | | | | |
|---|---|---|---|---|---|---|---|
| | Type | $V_{CES}$ V | $I_C$ A | $V_{CEsat}$ V $T_{vj}$=25 °C typ. | $E_{on}/E_{off}$ mWs $T_{vj}$=125 °C typ. | $R_{thJC}$ K/W | Outline / page |
| 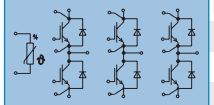 3-Phase-Full-Bridges | IGBT³ | | | | | | |
| | FS150R17KE3G | 1700 | 150 | 2,0 | 48/47 | 0,12 | M_E+a/98 |
| | FS225R17KE3 | 1700 | 225 | 2,0 | 71,5/70,5 | 0,09 | M_E+a/98 |
| | FS300R17KE3 | 1700 | 300 | 2,0 | 95/94 | 0,075 | M_E+a/98 |
| | FS450R17KE3 | 1700 | 450 | 2,0 | 140/140 | 0,055 | M_E+a/98 |

радиодетали электронные компоненты со склада и под заказ

# IGBT Medium Power Modules
# EconoDUAL™

## 1200 $V_{CES}$

| | Type | $V_{CES}$ V | $I_C$ A | $V_{CEsat}$ V $T_{vj}$=25 °C typ. | $E_{on}/E_{off}$ mWs $T_{vj}$=125 °C typ. | $R_{thJC}$ K/W | Outline / page |
|---|---|---|---|---|---|---|---|
| Dual Modules | IGBT³ | | | | | | |
| | ◆ FF150R12ME3G | 1200 | 150 | 1,7 | 11/24 | 0,18 | M_ED3/98 |
| | ◆ FF225R12ME3 | 1200 | 225 | 1,7 | 15/36 | 0,11 | M_ED3/98 |
| | ◆ FF300R12ME3 | 1200 | 300 | 1,7 | 22/43 | 0,085 | M_ED3/98 |
| | ◆ FF450R12ME3 | 1200 | 450 | 1,7 | 33/65 | 0,06 | M_ED3/98 |
| | Short Tail | | | | | | |
| | ◆ FF150R12MS4G | 1200 | 150 | 3,2 | 14,5/11 | 0,1 | M_ED3/98 |
| | ◆ FF225R12MS4 | 1200 | 225 | 3,2 | 20/15 | 0,085 | M_ED3/98 |
| | ◆ FF300R12MS4 | 1200 | 300 | 3,2 | 25/15 | 0,064 | M_ED3/98 |
| FD Chopper | IGBT³ | | | | | | |
| | FD150R12ME3 | 1200 | 150 | 1,7 | 11/24 | 0,18 | M_ED3/98 |
| | FD225R12ME3 | 1200 | 225 | 1,7 | 15/36 | 0,11 | M_ED3/98 |
| | FD300R12ME3 | 1200 | 300 | 1,7 | 22/43 | 0,085 | M_ED3/98 |
| | FD450R12ME3 | 1200 | 450 | 1,7 | 33/65 | 0,06 | M_ED3/98 |
| | Short Tail | | | | | | |
| | FD150R12MS4 | 1200 | 150 | 3,2 | 14,5/11 | 0,1 | M_ED3/98 |
| | FD225R12MS4 | 1200 | 225 | 3,2 | 20/15 | 0,085 | M_ED3/98 |
| | FD300R12MS4 | 1200 | 300 | 3,2 | 25/15 | 0,06 | M_ED3/98 |
| DF Chopper | IGBT³ | | | | | | |
| | DF150R12ME3 | 1200 | 150 | 1,7 | 11/24 | 0,18 | M_ED3/98 |
| | DF225R12ME3 | 1200 | 225 | 1,7 | 15/36 | 0,11 | M_ED3/98 |
| | DF300R12ME3 | 1200 | 300 | 1,7 | 22/43 | 0,085 | M_ED3/98 |
| | DF450R12ME3 | 1200 | 450 | 1,7 | 33/65 | 0,06 | M_ED3/98 |
| | Short Tail | | | | | | |
| | DF150R12MS4 | 1200 | 150 | 3,2 | 14,5/11 | 0,1 | M_ED3/98 |
| | DF225R12MS4 | 1200 | 225 | 3,2 | 20/15 | 0,085 | M_ED3/98 |
| | DF300R12MS4 | 1200 | 300 | 3,2 | 25/15 | 0,06 | M_ED3/98 |

## 1700 $V_{CES}$

| | Type | $V_{CES}$ V | $I_C$ A | $V_{CEsat}$ V $T_{vj}$=25 °C typ. | $E_{on}/E_{off}$ mWs $T_{vj}$=125 °C typ. | $R_{thJC}$ K/W | Outline / page |
|---|---|---|---|---|---|---|---|
| Dual Modules | IGBT³ | | | | | | |
| | ◆ FF150R17ME3G | 1700 | 150 | 2,0 | 48/47 | 0,12 | M_ED3/98 |
| | ◆ FF225R17ME3 | 1700 | 225 | 2,0 | 71,5/70,5 | 0,09 | M_ED3/98 |
| | ◆ FF300R17ME3 | 1700 | 300 | 2,0 | 95/94 | 0,075 | M_ED3/98 |
| | ◆ FF450R17ME3 | 1700 | 450 | 2,0 | 140/140 | 0,055 | M_ED3/98 |
| FD Chopper | IGBT³ | | | | | | |
| | ◆ FD150R17ME3 | 1700 | 150 | 2,0 | 48/47 | 0,1 2 | M_ED3/98 |
| | ◆ FD225R17ME3 | 1700 | 225 | 2,0 | 71,5/70,5 | 0,09 | M_ED3/98 |
| | ◆ FD300R17ME3 | 1700 | 300 | 2,0 | 95/94 | 0,075 | M_ED3/98 |
| | ◆ FD450R17ME3 | 1700 | 450 | 2,0 | 140/140 | 0,055 | M_ED3/98 |
| DF Chopper | IGBT³ | | | | | | |
| | ◆ DF150R17ME3 | 1700 | 150 | 2,0 | 48/47 | 0,12 | M_ED3/98 |
| | ◆ DF225R17ME3 | 1700 | 225 | 2,0 | 71,5/70,5 | 0,09 | M_ED3/98 |
| | ◆ DF300RE17M3 | 1700 | 300 | 2,0 | 95/94 | 0,075 | M_ED3/98 |
| | ◆ DF450R17ME3 | 1700 | 450 | 2,0 | 140/140 | 0,06 | M_ED3/98 |

◆New type



радиодетали электронные компоненты со склада и под заказ

г.Минск тел.8(017)2005646 www.fotorele.net модули EUPEC IGBT Infineon minsk17@tut.by



# IGBT High Power Modules IHM

## 1200 $V_{CES}$

| | Type *) | $V_{CES}$ V | Ic A | $V_{CEsat}$ V $T_{vj}$=25°C typ. | $E_{on}/E_{off}$ mWs $T_{vj}$=125°C typ. | $R_{thJC}$ °K/W per arm | Outline / page |
|---|---|---|---|---|---|---|---|
| Dual modules | Standard 2. Generation | | | | | | |
| | FF400R12KF4 | 1200 | 400 | 2,7 | 70/60 | 0,046 | H_IH2/99 |
| | FF600R12KF4 | 1200 | 600 | 2,7 | 90/90 | 0,032 | H_IH2/99 |
| | FF800R12KF4 | 1200 | 800 | 2,7 | 130/120 | 0,025 | H_IH2/99 |
| | Low Loss 2. Generation | | | | | | |
| | FF400R12KL4C | 1200 | 400 | 2,1 | 72/58 | 0,044 | H_IH2/99 |
| | FF600R12KL4C | 1200 | 600 | 2,1 | 100/90 | 0,032 | H_IH2/99 |
| | FF800R12KL4C | 1200 | 800 | 2,1 | 120/130 | 0,025 | H_IH2/99 |
| | IGBT³ | | | | | | |
| | FF600R12KE3 | 1200 | 600 | 1,7 | 100/95 | 0,044 | H_IH2/99 |
| | FF800R12KE3 | 1200 | 800 | 1,7 | 135/130 | 0,032 | H_IH2/99 |
| | FF1200R12KE3 | 1200 | 1200 | 1,7 | 200/190 | 0,025 | H_IH2/99 |
| IH1/4 | Short Tail | | | | | | |
| | FZ800R12KS4_B2 | 1200 | 800 | 3,2 | 76/58 | 0,018 | H_IH4/99 |
| | Standard 2. Generation | | | | | | |
| | FZ800R12KF4 | 1200 | 800 | 2,7 | 130/120 | 0,023 | H_IH1/99 |
| | FZ1050R12KF4 | 1200 | 1050 | 2,7 | 150/170 | 0,018 | H_IH1/99 |
| | FZ1200R12KF4 | 1200 | 1200 | 2,7 | 170/190 | 0,016 | H_IH1/99 |
| | FZ1600R12KF4 | 1200 | 1600 | 2,7 | 220/290 | 0,0125 | H_IH1/99 |
| | FZ1800R12KF4 | 1200 | 1800 | 2,7 | 250/330 | 0,011 | H_IH7/100 |
| | FZ2400R12KF4 | 1200 | 2400 | 2,7 | 310/410 | 0,0084 | H_IH7/100 |
| IH7 | Low Loss 2. Generation | | | | | | |
| | FZ800R12KL4C | 1200 | 800 | 2,1 | 121/127 | 0,022 | H_IH1/99 |
| | FZ1200R12KL4C | 1200 | 1200 | 2,1 | 165/195 | 0,016 | H_IH1/99 |
| | FZ1600R12KL4C | 1200 | 1600 | 2,1 | 210/260 | 0,0125 | H_IH1/99 |
| | FZ1800R12KL4C | 1200 | 1800 | 2,1 | 230/295 | 0,0110 | H_IH7/100 |
| | FZ2400R12KL4C | 1200 | 2400 | 2,1 | 320/400 | 0,0084 | H_IH7/100 |
| Single modules | IGBT³ | | | | | | |
| | FZ1200R12KE3 | 1200 | 1200 | 1,7 | 245/190 | 0,022 | H_IH4/99 |
| | FZ1600R12KE3 | 1200 | 1600 | 1,7 | 325/250 | 0,016 | H_IH4/99 |
| | FZ2400R12KE3 | 1200 | 2400 | 1,7 | 490/380 | 0,0125 | H_IH4/99 |
| | FZ2400R12KE3_B9 | 1200 | 2400 | 1,7 | 490/380 | 0,0011 | H_IH7/100 |
| | FZ3600R12KE3 | 1200 | 3600 | 1,7 | 735/570 | 0,008 | H_IH7/100 |

## 1200 $V_{CES}$

| | Type *) | $V_{CES}$ V | Ic A | $V_{CEsat}$ V $T_{vj}$=25°C typ. | $E_{on}/E_{off}$ mWs $T_{vj}$=125°C typ. | $R_{thJC}$ K/W per arm | Outline / Page |
|---|---|---|---|---|---|---|---|
| Sixpack modules | Standard 2. Generation | | | | | | |
| | FS300R12KF4 | 1200 | 300 | 2,7 | 80/45 | 0,064 | H_IH8/100 |
| | FS400R12KF4 | 1200 | 400 | 2,7 | 100/55 | 0,048 | H_IH8/100 |
| Chopper modules | Standard 2. Generation | | | | | | |
| | FD600R12KF4 | 1200 | 600 | 2,7 | 90/90 | 0,032 | H_IH2/99 |
| 4-pack modules | Short Tail | | | | | | |
| | F4-400R12KS4_B2 | 1200 | 400 | 3,2 | 38/29 | 0,042 | H_IH5/99 |

All modules are UL recognized

радиодетали электронные компоненты со склада и под заказ

# IGBT High Power Modules IHM

## 1600 + 1700 $V_{CES}$

| | Type *) | $V_{CES}$ V | Ic A | $V_{CEsat}$ V $T_{vj}$=25°C typ. | $E_{on}/E_{off}$ mWs $T_{vj}$=125°C typ. | $R_{thJC}$ K/W per arm | Outline / page |
|---|---|---|---|---|---|---|---|
| Dual modules | Standard 2. Generation | | | | | | |
| | FF400R16KF4 | 1600 | 400 | 3,3 | 170/90 | 0,04 | H_IH2/99 |
| | FF600R16KF4 | 1600 | 600 | 3,5 | 240/140 | 0,032 | H_IH2/99 |
| | IGBT³ | | | | | | |
| | FF600R17KE3 | 1700 | 600 | 2,0 | 185/210 | 0,024 | H_IH2/99 |
| | FF800R17KE3 | 1700 | 800 | 2,0 | 240/280 | 0,028 | H_IH2/99 |
| | FF1200R17KE3 | 1700 | 1200 | 2,0 | 345/430 | 0,021 | H_IH2/99 |
| IH1 IH7 Single modules | Standard 2. Generation | | | | | | |
| | FZ800R16KF4 | 1600 | 800 | 3,3 | 340/180 | 0,02 | H_IH1/99 |
| | FZ1200R16KF4 | 1600 | 1200 | 3,5 | 490/290 | 0,016 | H_IH1/99 |
| | FZ1800R16KF4 | 1600 | 1800 | 3,5 | 750/450 | 0,011 | H_IH7/100 |
| | IGBT³ | | | | | | |
| | FZ1200R17KE3 | 1700 | 1200 | 2,0 | 345/430 | 0,017 | H_IH4/99 |
| | FZ1600R17KE3 | 1700 | 1600 | 2,0 | 440/585 | 0,014 | H_IH4/99 |
| | FZ2400R17KE3 | 1700 | 2400 | 2,0 | 590/910 | 0,010 | H_IH4/99 |
| | FZ2400R17KE3_B9 | 1700 | 2400 | 2,0 | 590/910 | 0,009 | H_IH7/100 |
| | FZ3600R17KE3 | 1700 | 3600 | 2,0 | 745/1430 | 0,007 | H_IH7/100 |
| Six pack modules | Standard 2. Generation | | | | | | |
| | FS300R16KF4 | 1600 | 300 | 3,5 | 120/70 | 0,064 | H_IH8/99 |
| FD… FD…-K Chopper modules | Standard 2. Generation | | | | | | |
| | FD400R16KF4 | 1600 | 400 | 3,3 | 170/90 | 0,04 | H_IH2/99 |
| | FD600R16KF4 | 1600 | 600 | 3,5 | 240/140 | 0,032 | H_IH2/99 |
| | IGBT³ | | | | | | |
| | FD1200R17KE3-K | 1700 | 1200 | 2,4 | 345/430 | 0,021 | H_IH4/99 |

## 1700 $V_{CES}$

| | Type *) | $V_{CES}$ V | Ic A | $V_{CEsat}$ V $T_{vj}$=25°C typ. | $E_{on}/E_{off}$ mWs $T_{vj}$=125°C typ. | $R_{thJC}$ K/W per arm | Outline / page |
|---|---|---|---|---|---|---|---|
| Dual modules | Low Loss | | | | | | |
| | FF400R17KF6C_B2 | 1700 | 400 | 2,7 | 180/150 | 0,016 | H_IH2/99 |
| | FF401R17KF6C_B2 | 1700 | 400 | 2,7 | 200/150 | 0,04 | H_IH9/101 |
| | FF600R17KF6C_B2 | 1700 | 600 | 2,7 | 270/220 | 0,026 | H_IH2/99 |
| | FF800R17KF6C_B2 | 1700 | 800 | 2,7 | 290/335 | 0,02 | H_IH2/99 |
| | IGBT³ | | | | | | |
| | FF400R17KE3_B2 | 1700 | 400 | 2,0 | 125/145 | 0,049 | H_IH9/101 |
| | FF600R17KE3_B2 | 1700 | 600 | 2,0 | 185/220 | 0,029 | H_IH2/99 |
| | FF800R17KE3_B2 | 1700 | 800 | 2,0 | 240/295 | 0,024 | H_IH2/99 |
| | FF1200R17KE3_B2 | 1700 | 1200 | 2,0 | 350/454 | 0,019 | H_IH2/99 |
| IH1 IH7 Single modules | Low Loss | | | | | | |
| | FZ800R17KF6C_B2 | 1700 | 800 | 2,7 | 300/325 | 0,02 | H_IH1/99 |
| | FZ1200R17KF6C_B2 | 1700 | 1200 | 2,7 | 330/480 | 0,013 | H_IH1/99 |
| | FZ1600R17KF6C_B2 | 1700 | 1600 | 2,7 | 430/670 | 0,01 | H_IH1/99 |
| | FZ1800R17KF6C_B2 | 1700 | 1800 | 2,7 | 570/725 | 0,009 | H_IH7/100 |
| | FZ2400R17KF6C_B2 | 1700 | 2400 | 2,7 | 750/1060 | 0,007 | H_IH7/100 |
| | IGBT³ | | | | | | |
| | FZ1200R17KE3_B2 | 1700 | 1200 | 2,0 | 350/445 | 0,014 | H_IH4/99 |
| | FZ1600R17KE3_B2 | 1700 | 1600 | 2,0 | 445/600 | 0,012 | H_IH4/99 |
| | FZ1800R17KE3_B2 | 1700 | 1800 | 2,0 | 490/680 | 0,010 | H_IH7/100 |
| | FZ2400R17KE3_B2 | 1700 | 2400 | 2,0 | 610/920 | 0,008 | H_IH7/100 |
| FD… FD…-K Chopper modules | Low Loss | | | | | | |
| | FD401R17KF6C_B2 | 1700 | 400 | 2,7 | 200/150 | 0,04 | H_IH9/101 |
| | FD600R17KF6C_B2 | 1700 | 600 | 2,7 | 270/220 | 0,016 | H_IH2/99 |
| | FD800R17KF6C_B2 | 1700 | 800 | 2,7 | 290/335 | 0,02 | H_IH2/99 |
| | FD1600/1200R17KF6C_B2 | 1700 | 1600 | 2,7 | 430/670 | 0,01 | H_IH7/100 |
| | IGBT³ | | | | | | |
| | FD600R17KE3_B2 | 1700 | 600 | 2,0 | 185/220 | 0,029 | H_IH2/99 |
| | FD800R17KE3_B2 | 1700 | 800 | 2,0 | 240/295 | 0,024 | H_IH2/99 |
| | FD1200R17KE3-K_B2 | 1700 | 1200 | 2,0 | 350/445 | 0,019 | H_IH4/99 |

◆ New type

..._B2: Traction Module (AlSiC)

*) valid for all part-no: $T_{vj}$ = 125°C, $I_{CRM}$ = 2x$I_C$



радиодетали электронные компоненты со склада и под заказ

г.Минск тел.8(017)2005646 www.fotorele.net модули EUPEC IGBT Infineon minsk17@tut.by



# IGBT High Power Modules IHV

## 3300 $V_{CES}$

| | Type *) | $V_{CES}$ V | Ic A | $V_{CEsat}$ V V $T_{vj}$=25°C typ. | $E_{on}/E_{off}$ mWs $T_{vj}$=125°C typ. | $R_{thJC}$ K/W per arm | Outline / page |
|---|---|---|---|---|---|---|---|
| Dual modules | Standard | | | | | | |
| | FF200R33KF2C | 3300 | 200 | 3,4 | 480/255 | 0,057 | H_IH9/101 |
| | FF400R33KF2C | 3300 | 400 | 3,4 | 960/510 | 0,026 | H_IH6/100 |
| Single modules (IH4, IH7) | Standard | | | | | | |
| | FZ800R33KF2C | 3300 | 800 | 3,4 | 1920/1020 | 0,013 | H_IH4/99 |
| | FZ1200R33KF2C | 3300 | 1200 | 3,4 | 2880/1530 | 0,0085 | H_IH7/100 |
| | High DC-Stability | | | | | | |
| | FZ800R33KL2C | 3300 | 800 | 3,0 | 2250/1250 | 0,013 | H_IH4/99 |
| | FZ1200R33KL2C | 3300 | 1200 | 3,0 | 3150/1900 | 0,085 | H_IH7/100 |
| | High Insulation | | | | | | |
| | FZ400R33KL2C_B5 | 3300 | 400 | 3,0 | 1200/600 | 0,026 | H_IH10/101 |
| | FZ800R33KL2C_B5 | 3300 | 800 | 3,0 | 2250/1250 | 0,013 | H_IH11/101 |
| | FZ1200R33KL2C_B5 | 3300 | 1200 | 3,0 | 3150/1900 | 0,0085 | H_IH12/101 |
| Chopper modules (FD…) | Standard | | | | | | |
| | FD400R33KF2C | 3300 | 400 | 3,4 | 730/510 | 0,026 | H_IH4/99 |
| | FD800R33KF2C | 3300 | 800 | 3,4 | 1450/1000 | 0,013 | H_IH7/100 |
| Chopper modules (FD…-K) | Standard | | | | | | |
| | FD400R33K2C-K | 3300 | 400 | 3,4 | 730/510 | 0,026 | H_IH4/99 |
| | FD800R33KF2C-K | 3300 | 800 | 3,4 | 1450/1000 | 0,013 | H_IH4/99 |
| | High Insulation | | | | | | |
| | FD800R33KL2C-K_B5 | 3300 | 800 | 3,4 | 2250/1250 | 0,013 | H_IH12/101 |

# IHM-B

## 3300 $V_{CES}$

| | Type *) | $V_{CES}$ V | Ic A | $V_{CEsat}$ V V $T_{vj}$=25°C typ. | $E_{on}/E_{off}$ mWs $T_{vj}$=125°C typ. | $R_{thJC}$ K/W per arm | Outline / page |
|---|---|---|---|---|---|---|---|
| IH7B Single modules | Standard | | | | | | |
| | FZ1500R33HL3 | 3300 | 1500 | 2,45 | 3200/2700 | 0,0085 | H_IH7B/100 |

## Diode Modules

| | Type *) | $V_{RRM}$ V | $I_F$ A | $Q_r$ µAs typ. | $R_{thJC}$ K/W per arm | Outline / page |
|---|---|---|---|---|---|---|
| Diode Modules | DD400S16K4 | 1600 | 400 | 40 | 0,1 | H_IH1/99 |
| | DD600S16K4 | 1600 | 600 | 60 | 0,08 | H_IH1/99 |
| | DD400S17K6C_B2 | 1700 | 400 | 145 | 0,016 | H_IH1/99 |
| | DD600S17K3_B2 | 1700 | 600 | 260 | 0,051 | H_IH4/99 |
| | DD800S17K3_B2 | 1700 | 800 | 345 | 0,043 | H_IH4/99 |
| | DD800S17K6C_B2 | 1700 | 800 | 265 | 0,034 | H_IH1/99 |
| | Standard | | | | | |
| | DD200S33K2C | 3300 | 200 | 220 | 0,108 | H_IH9/101 |
| | DD400S33K2C | 3300 | 400 | 440 | 0,051 | H_IH4/99 |
| | DD800S33K2C | 3300 | 800 | 900 | 0,025 | H_IH4/99 |
| | DD1200S33K2C | 3300 | 1200 | 1300 | 0,017 | H_IH4/99 |
| | DD400S33KL2C | 3300 | 400 | 480 | 0,051 | H_IH4/99 |
| | High Insulation | | | | | |
| | DD1200S33KL2C_B5 | 3300 | 1200 | 1450 | 0,017 | H_IH11/101 |

◆ New type

…_B5: 6.5kV housing / 10.2kV insulation

*) valid for all part-no: $T_{vj}$ = 125°C, $I_{CRM}$ = 2x$I_C$

радиодетали электронные компоненты со склада и под заказ

# IGBT High Power Modules IHV

## 6500 $V_{CES}$

| | Type *) | $V_{CES}$ V | Ic A | $V_{CEsat}$ V $T_{vj}$=25°C typ. | $E_{on}/E_{off}$ mWs $T_{vj}$=125°C typ. | $R_{thJC}$ K/W per arm | Outline / page |
|---|---|---|---|---|---|---|---|
| 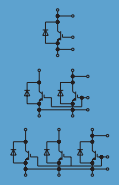 Single modules | Standard | | | | | | |
| | FZ200R65KF1 | 6500 | 200 | 4,3 | 1900/1200 | 0,033 | H_IH10/101 |
| | FZ400R65KF1 | 6500 | 400 | 4,3 | 4000/2300 | 0,017 | H_IH11/101 |
| | FZ600R65KF1 | 6500 | 600 | 4,3 | 5900/3500 | 0,011 | H_IH12/101 |
| Chopper modules | Standard | | | | | | |
| | FD200R65KF1-K | 6500 | 200 | 4,3 | 1900/1200 | 0,033 | H_IH11/101 |
| | FD400R65KF1-K | 6500 | 400 | 4,3 | 4000/2300 | 0,017 | H_IH12/101 |

## Diode Modules

| | Type *) | $V_{RRM}$ V | $I_F$ A | $Q_r$ µAs typ. | $R_{thJC}$ K/W per arm | Outline / page |
|---|---|---|---|---|---|---|
| Diode Modules | DD200S65K1 | 6500 | 200 | 350 | 0,063 | H_IH11/101 |
| | DD400S65K1 | 6500 | 400 | 700 | 0,032 | H_IH11/101 |
| | DD600S65K1 | 6500 | 600 | 1050 | 0,021 | H_IH11/101 |

*) valid for all part-no:
$T_{vj}$ = 125°C, $I_{CRM}$ = 2x$I_C$



радиодетали электронные компоненты со склада и под заказ

г.Минск тел.8(017)2005646 www.fotorele.net модули EUPEC IGBT Infineon minsk17@tut.by



# *EiceDRIVER*™ (eupec IGBT controlled efficiency DRIVER)

| | Type | Channels | Control Interface | IGBT max. $V_{CE}$ V | $V_{ISO}$ V | $I_{GM}$ A | $P_{OUT}$ W | size mm·mm | mounting by | for modules | Outline / page |
|---|---|---|---|---|---|---|---|---|---|---|---|
| 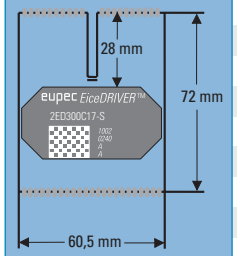  | 2ED300C17-S | 2 | E | 1700 | * | ±30 | 7 | 60,5 - 72 | soldering | EconoPACK™+, 62 mm, IHM | 120 |
| | 2ED300C17-ST | 2 | E | 1700 | * | ±30 | 7 | 60,5 - 72 | soldering | EconoPACK™+, 62 mm, IHM | 120 |
| 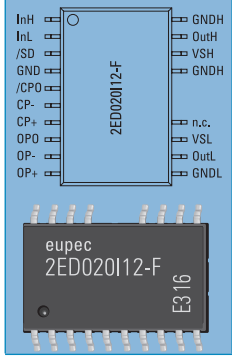  | 2ED020I12-F | 2 | E | 1200 | * | +1/-2 | | 12,8 - 10,3 | soldering | EasyPIM™, EasyPACK, EconoPACK™, EconoPIM™, 34 mm | 120 P-DSO-18-1 120 |

* Datasheets available under **www.eicedriver.com**

**Technical features 2ED300C17-S / 2ED300C17-ST**

- Failure output
- Half-bridge – or direct mode can be adjusted
- Interlocking against each other and dead time generation in half-bridge mode
- Low-resistance and therefore noise-immune 15 V PWM signal input
- + 15 V signal processing (15 V logic)
- Minimum pulse suppression 400 ns
- Reset input and PWM reset
- Dynamic over-current detection (DOCD) by monitoring the saturation voltage
- "Soft shut down" in case of failure shutdown
- External detected failure analysis (EDFA)
- 15V logic (high noise immunity)
- Additional ± 16 V supply outputs

**Technical features 2ED020I12-F**

- Half-bridge IGBT/MOSFET Driver IC
- Fully operational to ± 1200 V
- High speed transfer rate
- High dv/dt immunity
- Matched propagation delay for both channels
- Under-voltage lock-out for both channels
- Dedicated shutdown input
- 3.3 V and 5 V TTL compatible inputs
- General purpose operational amplifier integrated
- General purpose comparator integrated

радиодетали электронные компоненты со склада и под заказ

# Overview Bridge Rectifier, AC-Switches

| $V_{RRM}$ | EasyBRIDGE | IsoPACK Bridge | IsoPACK AC-Switch | EconoBRIDGE |
|---|---|---|---|---|
| 2000 | | | | |
| 1600 | 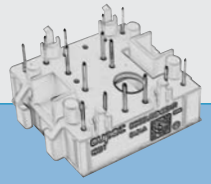 | 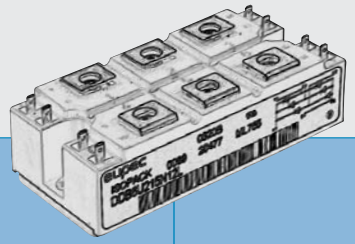 | | 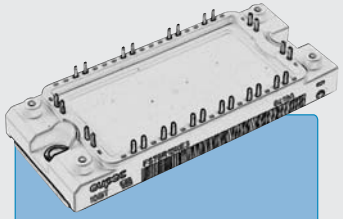 |
| | $I_d$ = 30 - 65 A | $I_d$ = 85 - 205 A | $I_d$ = 75 - 120 A | $I_d$ = 75 - 145 A |
| | Configuration<br>B2U<br>B6U | Configuration<br>B6<br>U/HK/C | Configuration<br>W3C<br>W3H | Configuration<br>B6U<br>B6HK |
| | 25 mm | 42/54 mm | | 45 mm |

г.Минск тел.8(017)2005646 www.fotorele.net модули EUPEC IGBT Infineon minsk17@tut.by



# IGBT Low Power Modules
# EasyBRIDGE

## 800 V

| | Type | Rectifier Diodes | | | | | Brake Chopper | | | Outline / page |
|---|---|---|---|---|---|---|---|---|---|---|
| | | $V_{RRM}$ V | $I_d$ A | $R_{thJC}$ K/W max. | $V_{t0}$ V $T_{vj}$ = 150 °C | rt mΩ | $V_{CE}$ V | $I_C$* A $T_C$ = 80 °C | $R_{thJC}$ K/W max. | |
| 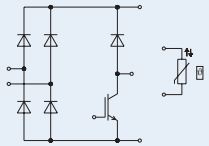 | single phase | | | | | | | | | |
| | DDB2U30N08VR | 800 | 48 | 1,30 | 0,75 | 6,95 | 600 | 20 | 1,50 | L_750d/102 |
| 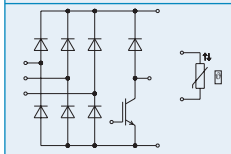 | three phase | | | | | | | | | |
| | DDB6U30N08VR | 800 | 30 | 1,80 | 0,85 | 8,30 | 600 | 20 | 1,50 | L_750e/102 |
| 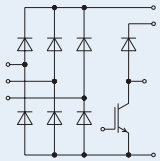 | three phase | | | | | | | | | |
| | DDB6U50N08XR | 800 | 50 | 1,20 | 0,75 | 6,95 | 600 | 30 | 1,05 | L_1c/102 |

* as specified in data sheet

радиодетали электронные компоненты со склада и под заказ

# IGBT Low Power Modules
# EasyBRIDGE

## 1600 V

| | Type | Rectifier Diodes | | | | | Brake Chopper | | | Outline / page |
|---|---|---|---|---|---|---|---|---|---|---|
| | | $V_{RRM}$ V | $I_d$ A | $R_{thJC}$ K/W max. | $V_{t0}$ V $T_{vj}$ = 150 °C | rt mΩ | $V_{CE}$ V | $I_C$* A $T_C$ = 80 °C | $R_{thJC}$ K/W max. | |
| 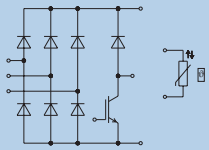 | three phase DDB6U25N16VR | 1600 | 30 | 1,55 | 0,76 | 7,60 | 1200 | 15 | 1,45 | L_750e/102 |
| 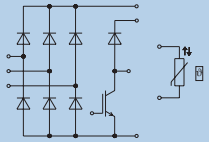 | three phase DDB6U75N16YR | 1600 | 65 | 0,90 | 0,83 | 3,90 | 1200 | 50 | 0,55 | L_2i/102 |
| 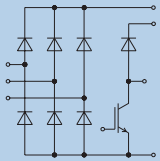 | three phase DDB6U40N16XR | 1600 | 50 | 0,90 | 0,80 | 4,35 | 1200 | 25 | 0,90 | L_1c/102 |

* as specified in data sheet

г.Минск тел.8(017)2005646 www.fotorele.net модули EUPEC IGBT Infineon minsk17@tut.by



# EconoBRIDGE™ Rectifier

| | | Type | $V_{DRM}$, $V_{RRM}$ V $V_{DSM} = V_{DRM}$ $V_{RSM} = V_{RRM} + 100V$ | $I_{FRMSM}$ ($I_{TRMSM}$) A | $I_{FSM}$ ($I_{TSM}$) A 10 ms, $T_{vj\,max}$ | $I_d/T_c$ A/°C | $V_{(TO)}$ V $T_{vj} = T_{vj\,max}$ | $r_T$ mΩ $T_{vj} = T_{vj\,max}$ | $R_{thJC}$ °C/W per arm 120° el. Square wave | $T_{vj\,max}$ °C | Brake IGBT $V_{CES}$ V | Brake IGBT $I_C$ A | Outline / page |
|---|---|---|---|---|---|---|---|---|---|---|---|---|---|
| 3 phase bridge rectifier, uncontrolled | 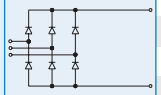 | DD B6U 84 N 16 R | 1600 | 60 | 550 | 85/100 | 0,75 | 5,5 | 1,45 | 150 | | | M_E2g/103 |
| | | DD B6U 100 N 16 R | 1600 | 60 | 550 | 100/100 | 0,75 | 5,5 | 1,15 | 150 | | | M_E2g/103 |
| | | DD B6U 144 N 16 R | 1600 | 100 | 1000 | 145/100 | 0,75 | 3,1 | 0,89 | 150 | | | M_E2g/103 |
| 3 phase bridge rectifier, uncontrolled with brake chopper | 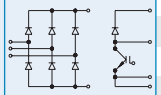 | DD B6U 84 N 16 RR | 1600 | 60 | 550 | 85/100 | 0,75 | 5,5 | 1,45 | 150 | 1200 | 50 | M_E2h/103 |
| | | DD B6U 100 N 16 RR | 1600 | 60 | 550 | 100/100 | 0,75 | 5,5 | 1,15 | 150 | 1200 | 50 | M_E2h/103 |
| 3 phase bridge rectifier, uncontrolled with brake chopper and NTC | 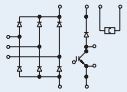 | DD B6U 104 N 16 RR | 1600 | 60 | 550 | 105/100 | 0,75 | 5,5 | 1,08 | 150 | 1200 | 50 | M_E2j/103 |
| | | DD B6U 134 N 16 RR | 1600 | 80 | 550 | 134/100 | 0,75 | 6,3 | 0,70 | 150 | 1200 | 70 | M_E2j/103 |
| 3 phase bridge rectifier, halfcontrolled with brake chopper and NTC | 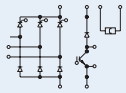 | TD B6HK 74 N 16 RR | 1600 | 45 | 400 | 75/85 | 0,75 | 9,1 | 1,10 | 125 | 1200 | 50 | M_E2i/103 |
| | | TD B6HK 104 N 16 RR | 1600 | 60 | 550 | 104/85 | 0,80 | 7,0 | 0,75 | 125 | 1200 | 50 | M_E2i/103 |
| | | TD B6HK 124 N 16 RR | 1600 | 70 | 550 | 125/85 | 0,75 | 6,3 | 0,63 | 125 | 1200 | 70 | M_E2i/103 |

EconoBRIDGE™ Rectifiers are UL recognized

радиодетали электронные компоненты со склада и под заказ

# IsoPACK™ Bridge Rectifier

| | | Type | $V_{DRM}$, $V_{RRM}$ V $V_{DSM} = V_{DRM}$ $V_{RSM} = V_{RRM} + 100V$ | $I_{FRMSM}$ ($I_{TRMSM}$) A | $I_{FSM}$ ($I_{TSM}$) A 10 ms, $T_{vj\,max}$ | $I_d/T_c$ A/°C | $V_{(TO)}$ V $T_{vj} = T_{vj\,max}$ | $r_T$ mΩ $T_{vj} = T_{vj\,max}$ | $R_{thJC}$ °C/W per arm 120° el Square wave | $T_{vj\,max}$ °C | Outline / page |
|---|---|---|---|---|---|---|---|---|---|---|---|
| 3 phase bridge rectifier, uncontrolled | 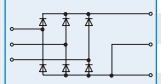 | DD B6U 85 N [1] | 1600 | 60 | 550 | 85/100 | 0,75 | 5,5 | 1,45 | 150 | M_1Pa/104 |
| | | DD B6U 145 N [1] | 1600 | 100 | 1000 | 145/100 | 0,75 | 3,1 | 0,89 | 150 | M_1Pa/104 |
| | | DD B6U 205 N [1] | 1600 | 120 | 1375 | 205/100 | 0,75 | 2,2 | 0,59 | 150 | M_1Pa/104 |
| 3 phase bridge rectifier, half controlled | 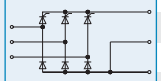 | TD B6HK 95 N [2] | 1600 | 75 | 620 | 95/85 | 0,95 | 5,5 | 0,82 | 125 | M_1Pb/104 |
| | | TD B6HK 135 N [2] | 1600 | 100 | 870 | 135/85 | 0,95 | 4,3 | 0,59 | 125 | M_1Pb/104 |
| | | TD B6HK 165 N [2] | 1600 | 120 | 1050 | 165/85 | 0,95 | 3,2 | 0,49 | 125 | M_1Pb/104 |
| 3 phase bridge rectifier, fully controlled | 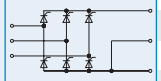 | TT B6C 95 N [2] | 1600 | 75 | 620 | 95/85 | 0,95 | 5,5 | 0,82 | 125 | M_1Pb/104 |
| | | TT B6C 135 N [2] | 1600 | 100 | 870 | 135/85 | 0,95 | 4,3 | 0,59 | 125 | M_1Pb/104 |
| | | TT B6C 165 N [2] | 1600 | 120 | 1050 | 165/85 | 0,95 | 3,2 | 0,49 | 125 | M_1Pb/104 |

# IsoPACK™ AC-Switches

| | | Type | $V_{DRM}$, $V_{RRM}$ V $V_{DSM} = V_{DRM}$ $V_{RSM} = V_{RRM} + 100V$ | $I_{FRMSM}$ ($I_{TRMSM}$) A | $I_{FSM}$ ($I_{TSM}$) A 10 ms, $T_{vj\,max}$ | $I_{RMS}/T_c$ A/°C | $V_{(TO)}$ V $T_{vj} = T_{vj\,max}$ | $r_T$ mΩ $T_{vj} = T_{vj\,max}$ | $R_{thJC}$ °C/W per arm 180° el Sinus | $T_{vj\,max}$ °C | Outline / page |
|---|---|---|---|---|---|---|---|---|---|---|---|
| 3 phase AC-Switches, fully controlled | 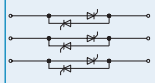 | TT W3C 85 N [2] | 1600 | 75 | 620 | 85/85 | 0,95 | 5,5 | 0,70 | 125 | M_1Pb/104 |
| | | TT W3C 115 N [2] | 1600 | 100 | 870 | 115/85 | 0,95 | 4,3 | 0,50 | 125 | M_1Pb/104 |
| | | TT W3C 145 N [2] | 1600 | 120 | 1050 | 145/85 | 0,95 | 3,2 | 0,42 | 125 | M_1Pb/104 |
| 3 phase AC-Switches, half controlled | 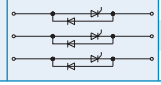 | TD W3H 115 N [2] | 1600 | 100 | 900 | 115/85 | 0,95 | 4,3 | 0,50 | 125 | M_1Pb/104 |

IsoPACK™ modules are UL recognized

Sets of srews will be included at customer's request at no cost. Requests must be made at time of order.

[1] IsoPACK 42: 30 pcs. M 5 x 11 for 5 modules – see page 122

[2] IsoPACK 54: 30 pcs. M 6 x15 for 5 modules – see page 122

г.Минск тел.8(017)2005646 www.fotorele.net модули EUPEC IGBT Infineon minsk17@tut.by



# Overview PowerBLOCK Thyristor Modules for Phase Control

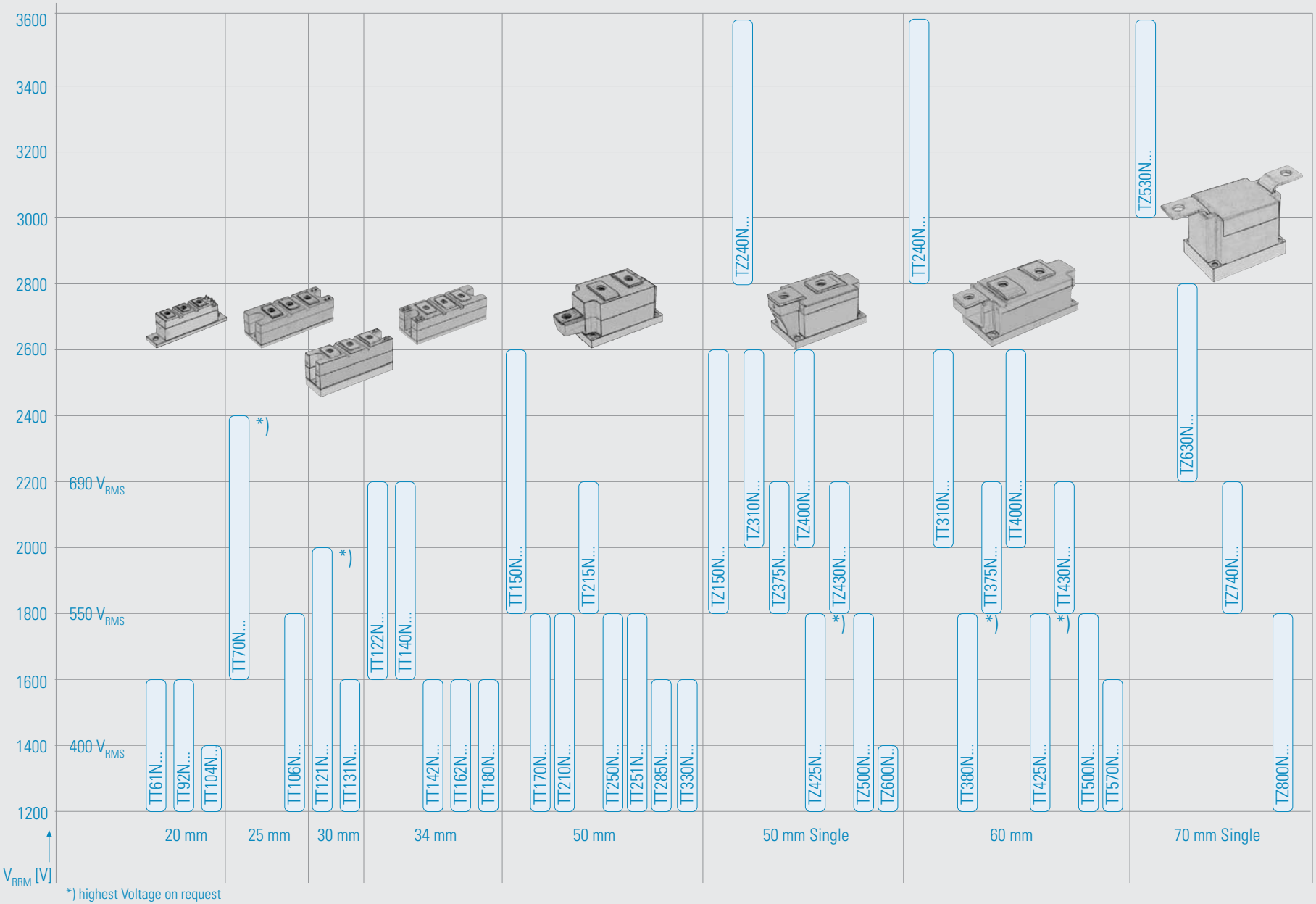


*) highest Voltage on request

радиодетали электронные компоненты со склада и под заказ

# PowerBLOCK Thyristor Modules for Phase Control

| | Type | $V_{DRM}$ $V_{RRM}$ V $V_{DSM} = V_{DRM}$ $V_{RSM} = V_{RRM} + 100$ V | $I_{TRMSM}$ A | $I_{TSM}$ A 10 ms, $T_{vj\,max}$ | $\int i^2dt$ $A^2s \cdot 10^3$ 10 ms, $T_{vj\,max}$ | $I_{TAVM}/T_c$ A/°C 180° el sin | $V_{(TO)}$ V $T_{vj} = T_{vj\,max}$ | $r_T$ mΩ $T_{vj} = T_{vj\,max}$ | $(di/dt)_{cr}$ A/µs DIN IEC 747 - 6 | $t_q$ µs typ. | $(dv/dt)_{cr}$ V/µs DIN IEC 747 - 6 | $R_{thJC}$ °C/W 180° el sin | $R_{thCK}$ °C/W | $T_{vj\,max}$ °C | Outline / page |
|---|---|---|---|---|---|---|---|---|---|---|---|---|---|---|---|
| Baseplate = 20 mm | TT 61 N | 1200 … 1600 | 120 | 1400 | 9,8 | 60/85 | 0,80 | 3,40 | 150 | 120 | F = 1000 | 0,52 | 0,16 | 125 | TP20/105 |
| | TT 92 N | 1200 … 1600 | 160 | 1800 | 16,2 | 92/85 | 0,85 | 2,15 | 150 | 150 | F = 1000 | 0,37 | 0,10 | 130 | TP20/105 |
| | TT 104 N | 1200 … 1400 | 160 | 1800 | 16,2 | 104/85 | 0,85 | 2,15 | 150 | 150 | F = 1000 | 0,37 | 0,10 | 140 | TP20/105 |
| Baseplate = 25 mm | TT 70 N | 1600 … 2400* | 150 | 1450 | 10,5 | 70/85 | 1,00 | 3,80 | 100 | 300 | F = 1000 | 0,35 | 0,08 | 125 | TP25/105 |
| | TT 106 N | 1200 … 1800 | 180 | 2000 | 20,0 | 106/85 | 0,90 | 2,60 | 150 | 150 | F = 1000 | 0,33 | 0,08 | 140 | TP25/105 |
| Baseplate = 30 mm | TT 121 N | 1200 … 2000* | 200 | 2350 | 27,6 | 121/85 | 0,85 | 2,00 | 150 | 180 | F = 1000 | 0,23 | 0,06 | 125 | TP30/105 |
| | TT 131 N | 1200 … 1600 | 220 | 3200 | 51,2 | 131/85 | 0,85 | 1,50 | 150 | 180 | F = 1000 | 0,23 | 0,06 | 125 | TP30/105 |
| Baseplate = 34 mm | TT 122 N | 1600 … 2200 | 220 | 2950 | 43,5 | 122/85 | 1,00 | 2,15 | 100 | 300 | F = 1000 | 0,2 | 0,06 | 125 | TP34/105 |
| | TT 140 N | 1600 … 2200 | 250 | 3200 | 51,2 | 140/85 | 0,90 | 1,75 | 150 | 300 | F = 1000 | 0,19 | 0,06 | 125 | TP34/105 |
| | TT 142 N | 1200 … 1600 | 230 | 4100 | 84 | 142/85 | 0,90 | 1,10 | 150 | 200 | F = 1000 | 0,22 | 0,06 | 125 | TP34/105 |
| | TT 162 N | 1200 … 1600 | 260 | 4400 | 97 | 162/85 | 0,85 | 0,95 | 150 | 200 | F = 1000 | 0,20 | 0,06 | 125 | TP34/105 |
| | TT 180 N | 1200 … 1600 | 285 | 4100 | 84 | 180/85 | 0,85 | 0,90 | 150 | 200 | F = 1000 | 0,20 | 0,06 | 130 | TP34/105 |
| Baseplate = 50 mm | TT 150 N | 1800 … 2600 | 350 | 4000 | 80 | 150/85 | 1,20 | 2,30 | 60 | 300 | F = 1000 | 0,13 | 0,04 | 125 | TP50/105 |
| | TT 170 N | 1200 … 1800 | 350 | 4600 | 106 | 170/85 | 0,95 | 1,00 | 150 | 250 | F = 1000 | 0,17 | 0,04 | 125 | TP50/105 |
| | TT 210 N | 1200 … 1800 | 410 | 5800 | 168 | 210/85 | 1,00 | 0,85 | 150 | 200 | F = 1000 | 0,13 | 0,04 | 125 | TP50/105 |
| | TT 215 N | 1800 … 2200 | 410 | 6300 | 198 | 215/85 | 0,95 | 0,92 | 100 | 300 | F = 1000 | 0,13 | 0,04 | 125 | TP50/105 |
| | TT 250 N | 1200 … 1800 | 410 | 7000 | 245 | 250/85 | 0,80 | 0,70 | 150 | 250 | F = 1000 | 0,13 | 0,04 | 125 | TP50/105 |
| | TT 251 N | 1200 … 1800 | 410 | 8000 | 320 | 250/85 | 0,80 | 0,70 | 250 | 250 | F = 1000 | 0,13 | 0,04 | 125 | TP50/105 |
| | TT 285 N | 1200 … 1600 | 450 | 8000 | 320 | 285/92 | 0,80 | 0,70 | 250 | 250 | F = 1000 | 0,117 | 0,04 | 135 | TP50/105 |
| | TT 330 N | 1200 … 1600 | 520 | 8000 | 320 | 330/85 | 0,80 | 0,60 | 250 | 250 | F = 1000 | 0,117 | 0,04 | 135 | TP50/105 |
| Baseplate = 60 mm | TT 240 N | 2800 … 3600 | 700 | 5500 | 151 | 240/85 | 1,17 | 1,70 | 100 | 350 | F = 1000 | 0,078 | 0,02 | 125 | TP60/105 |
| | TT 310 N | 2000 … 2600 | 700 | 9000 | 405 | 310/85 | 1,00 | 0,86 | 120 | 300 | F = 1000 | 0,078 | 0,02 | 125 | TP60/105 |
| | TT 380 N | 1200 … 1800 | 800 | 11000 | 605 | 380/85 | 1,00 | 0,38 | 120 | 250 | F = 1000 | 0,078 | 0,02 | 125 | TP60/105 |
| | TT 375 N | 1800 … 2200 | 900 | 10600 | 561 | 375/85 | 0,85 | 0,56 | 120 | 300 | F = 1000 | 0,078 | 0,02 | 125 | TP60/105 |
| | TT 400 N | 2000 … 2600 | 800 | 11000 | 605 | 400/85 | 1,00 | 0,50 | 150 | 300 | F = 1000 | 0,065 | 0,02 | 125 | TP60/105 |
| | TT 425 N | 1200 … 1800 | 800 | 12500 | 781 | 425/85 | 0,90 | 0,30 | 120 | 250 | F = 1000 | 0,078 | 0,02 | 125 | TP60/105 |
| | TT 430 N | 1800 … 2200 | 800 | 12000 | 720 | 430/85 | 0,95 | 0,45 | 150 | 300 | F = 1000 | 0,065 | 0,02 | 125 | TP60/105 |
| | TT 500 N | 1200 … 1800 | 900 | 14500 | 1051 | 500/85 | 0,90 | 0,27 | 200 | 250 | F = 1000 | 0,065 | 0,02 | 125 | TP60/105 |
| | TT 570 N | 1200 … 1600 | 900 | 14000 | 980 | 570/87 | 0,90 | 0,27 | 200 | 250 | F = 1000 | 0,065 | 0,02 | 135 | TP60/105 |

PowerBLOCK modules are UL recognized  Common anode or cathode on request  * Highest voltage on request

г.Минск тел.8(017)2005646 www.fotorele.net модули EUPEC IGBT Infineon minsk17@tut.by



# PowerBLOCK Single Thyristor Modules for Phase Control

| | Type | $V_{DRM}$ $V_{RRM}$ V $V_{DSM} = V_{DRM}$ $V_{RSM} = V_{RRM} + 100$ V | $I_{TRMSM}$ A | $I_{TSM}$ A 10 ms, $T_{vj\,max}$ | $\int i^2dt$ $A^2s \cdot 10^3$ 10 ms, $T_{vj\,max}$ | $I_{TAVM}/T_c$ A/°C 180° el sin | $V_{(TO)}$ V $T_{vj} = T_{vj\,max}$ | $r_T$ mΩ $T_{vj} = T_{vj\,max}$ | $(di/dt)_{cr}$ A/µs DIN IEC 747 - 6 | $t_q$ µs typ. | $(dv/dt)_{cr}$ V/µs DIN IEC 747 - 6 | $R_{thJC}$ °C/W 180° el sin | $R_{thCK}$ °C/W | $T_{vj\,max}$ °C | Outline / page |
|---|---|---|---|---|---|---|---|---|---|---|---|---|---|---|---|
| Baseplate = 50 mm | TZ 150 N | 1800 … 2600 | 350 | 4000 | 80 | 150/85 | 1,20 | 2,30 | 60 | 300 | F = 1000 | 0,13 | 0,04 | 125 | TP50.1/105 |
| | TZ 240 N | 2800 … 3600 | 700 | 5500 | 151 | 240/85 | 1,17 | 1,70 | 100 | 350 | F = 1000 | 0,078 | 0,02 | 125 | TP50.1/105 |
| | TZ 310 N | 2000 … 2600 | 700 | 8000 | 320 | 310/85 | 1,00 | 0,86 | 120 | 300 | F = 1000 | 0,078 | 0,02 | 125 | TP50.1/105 |
| | TZ 375 N | 1800 … 2200 | 1050 | 10600 | 561 | 375/85 | 0,85 | 0,56 | 120 | 300 | F = 1000 | 0,078 | 0,02 | 125 | TP50.1/105 |
| | TZ 400 N | 2000 … 2600 | 1050 | 11000 | 605 | 400/85 | 1,00 | 0,50 | 150 | 300 | F = 1000 | 0,065 | 0,02 | 125 | TP50.1/105 |
| | TZ 425 N | 1200 … 1800 | 800 | 12500 | 781 | 425/85 | 0,90 | 0,30 | 120 | 250 | F = 1000 | 0,078 | 0,02 | 125 | TP50.1/105 |
| | TZ 430 N | 1800 … 2200 | 1050 | 12000 | 720 | 430/85 | 0,95 | 0,45 | 150 | 300 | F = 1000 | 0,065 | 0,02 | 125 | TP50.1/105 |
| | TZ 500 N | 1200 … 1800 | 1050 | 14500 | 1051 | 500/85 | 0,90 | 0,27 | 200 | 250 | F = 1000 | 0,065 | 0,02 | 125 | TP50.1/105 |
| | TZ 600 N | 1200 … 1400 | 1050 | 14000 | 980 | 600/85 | 0,90 | 0,27 | 200 | 250 | F = 1000 | 0,065 | 0,02 | 135 | TP50.1/105 |
| Baseplate = 70 mm | TZ 530 N | 3000 … 3600 | 1500 | 20000 | 2000 | 530/85 | 1,05 | 0,49 | 80 | 400 | F = 1000 | 0,045 | 0,01 | 125 | TP70/106 |
| | TZ 630 N | 2200 … 2800 | 1500 | 23000 | 2650 | 630/85 | 0,95 | 0,37 | 150 | 400 | F = 1000 | 0,042 | 0,01 | 125 | TP70/106 |
| | TZ 740 N | 1800 … 2200 | 1500 | 26500 | 3500 | 740/85 | 0,90 | 0,21 | 200 | 350 | F = 1000 | 0,042 | 0,01 | 125 | TP70/106 |
| | TZ 800 N | 1200 … 1800 | 1500 | 30000 | 4500 | 800/85 | 0,85 | 0,17 | 200 | 240 | F = 1000 | 0,042 | 0,01 | 125 | TP70/106 |

PowerBLOCK modules are UL recognized

радиодетали электронные компоненты со склада и под заказ

г.Минск тел.8(017)2005646 www.fotorele.net модули EUPEC IGBT Infineon minsk17@tut.by

# Overview PowerBLOCK Thyristor/Diode Modules for Phase Control

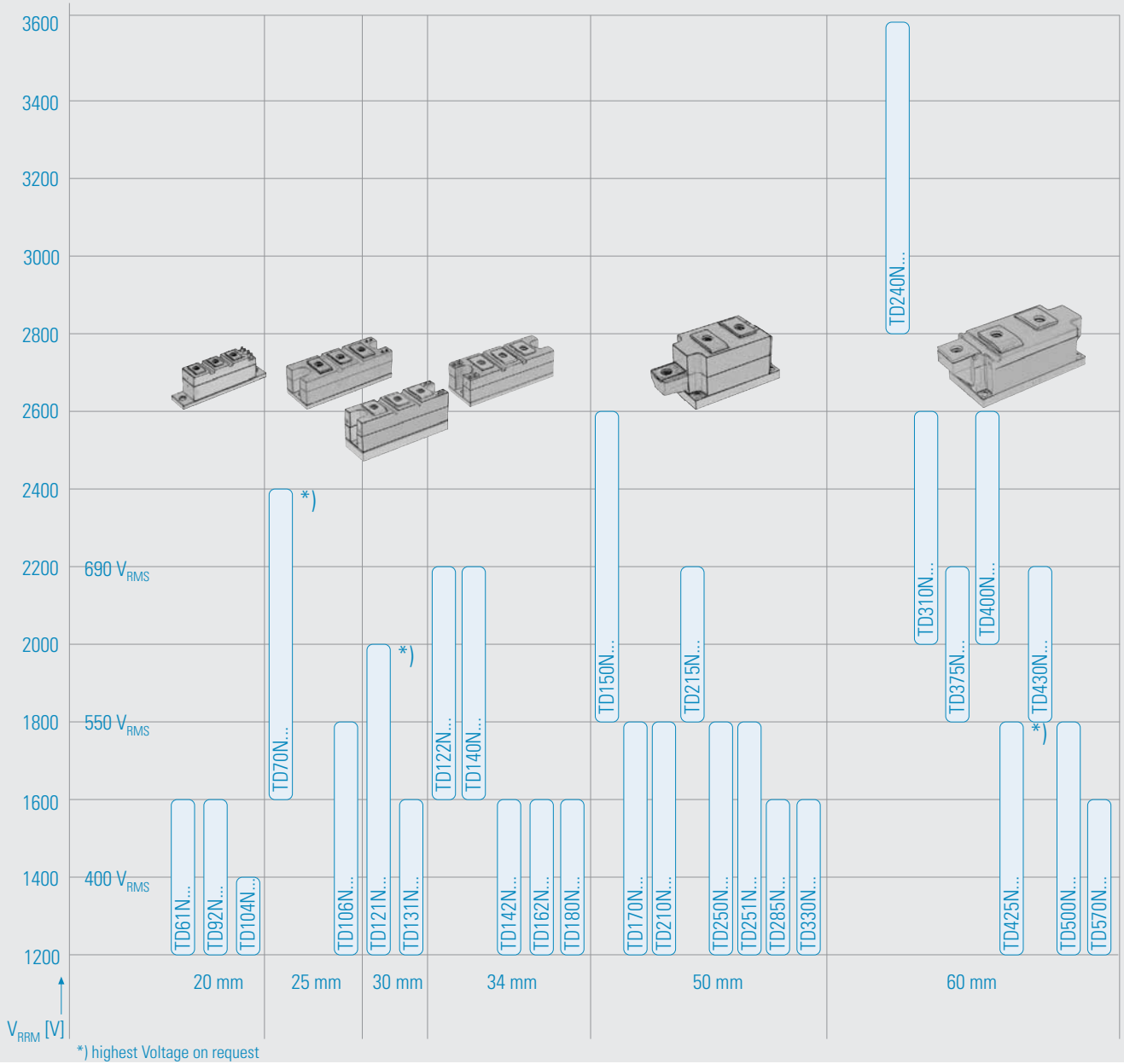


*) highest Voltage on request





радиодетали электронные компоненты со склада и под заказ

г.Минск тел.8(017)2005646 www.fotorele.net модули EUPEC IGBT Infineon minsk17@tut.by



# PowerBLOCK Thyristor/Diode Modules for Phase Control

| 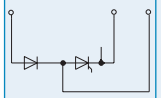 | Type | $V_{DRM}$ $V_{RRM}$ V $V_{DSM} = V_{DRM}$ $V_{RSM} = V_{RRM} + 100$ V | $I_{TRMSM}$ A | $I_{TSM}$ A 10 ms, $T_{vj\,max}$ | $\int i^2dt$ $A^2s \cdot 10^3$ 10 ms, $T_{vj\,max}$ | $I_{TAVM}/T_c$ A/°C 180° el sin | $V_{(TO)}$ V $T_{vj} = T_{vj\,max}$ | $r_T$ mΩ $T_{vj} = T_{vj\,max}$ | $(di/dt)_{cr}$ A/µs DIN IEC 747 - 6 | $t_q$ µs typ. | $(dv/dt)_{cr}$ V/µs DIN IEC 747 - 6 | $R_{thJC}$ °C/W 180° el sin | $R_{thCK}$ °C/W | $T_{vj\,max}$ °C | Outline / page |
|---|---|---|---|---|---|---|---|---|---|---|---|---|---|---|---|
| Baseplate = 20 mm | TD61N | 1200 … 1600 | 120 | 1400 | 9,8 | 60/85 | 0,80 | 3,40 | 150 | 120 | F = 1000 | 0,52 | 0,16 | 125 | TP20/105 |
| | TD92N | 1200 … 1600 | 160 | 1800 | 16,2 | 92/85 | 0,85 | 2,15 | 150 | 150 | F = 1000 | 0,37 | 0,10 | 130 | TP20/105 |
| | TD104N | 1200 … 1400 | 160 | 1800 | 16,2 | 104/85 | 0,85 | 2,15 | 150 | 150 | F = 1000 | 0,37 | 0,10 | 140 | TP20/105 |
| Baseplate = 25 mm | TD70N | 1600 … 2400* | 150 | 1450 | 10,5 | 70/85 | 1,00 | 3,80 | 100 | 300 | F = 1000 | 0,35 | 0,08 | 125 | TP25/105 |
| | TD106N | 1200 … 1800 | 180 | 2000 | 20,0 | 106/85 | 0,90 | 2,60 | 150 | 150 | F = 1000 | 0,33 | 0,08 | 140 | TP25/105 |
| Baseplate = 30 mm | TD121N | 1200 … 2000* | 200 | 2350 | 27,6 | 121/85 | 0,85 | 2,00 | 150 | 180 | F = 1000 | 0,23 | 0,06 | 125 | TP30/105 |
| | TD131N | 1200 … 1600 | 220 | 3200 | 51,2 | 131/85 | 0,85 | 1,50 | 150 | 180 | F = 1000 | 0,23 | 0,06 | 125 | TP30/105 |
| Baseplate = 34 mm | TD122N | 1600 … 2200 | 220 | 2950 | 43,5 | 122/85 | 1,00 | 2,15 | 100 | 300 | F = 1000 | 0,20 | 0,06 | 125 | TP34/105 |
| | TD140N | 1600 … 2200 | 250 | 3200 | 51,2 | 140/85 | 0,90 | 1,75 | 150 | 300 | F = 1000 | 0,19 | 0,06 | 125 | TP34/105 |
| | TD142N | 1200 … 1600 | 230 | 4100 | 84 | 142/85 | 0,90 | 1,10 | 150 | 200 | F = 1000 | 0,22 | 0,06 | 125 | TP34/105 |
| | TD162N | 1200 … 1600 | 260 | 4400 | 97 | 162/85 | 0,85 | 0,95 | 150 | 200 | F = 1000 | 0,20 | 0,06 | 125 | TP34/105 |
| | TD180N | 1200 … 1600 | 285 | 4100 | 84 | 180/85 | 0,85 | 0,90 | 150 | 200 | F = 1000 | 0,20 | 0,06 | 130 | TP34/105 |
| Baseplate = 50 mm | TD150N | 1800 … 2600 | 350 | 4000 | 80 | 150/85 | 1,20 | 2,30 | 60 | 300 | F = 1000 | 0,13 | 0,04 | 125 | TP50/105 |
| | TD170N | 1200 … 1800 | 350 | 4600 | 106 | 170/85 | 0,95 | 1,00 | 150 | 250 | F = 1000 | 0,17 | 0,04 | 125 | TP50/105 |
| | TD210N | 1200 … 1800 | 410 | 5800 | 168 | 210/85 | 1,00 | 0,85 | 150 | 200 | F = 1000 | 0,13 | 0,04 | 125 | TP50/105 |
| | TD215N | 1800 … 2200 | 410 | 6300 | 198 | 215/85 | 0,95 | 0,92 | 100 | 300 | F = 1000 | 0,13 | 0,04 | 125 | TP50/105 |
| | TD250N | 1200 … 1800 | 410 | 7000 | 245 | 250/85 | 0,80 | 0,70 | 150 | 250 | F = 1000 | 0,13 | 0,04 | 125 | TP50/105 |
| | TD251N | 1200 … 1800 | 410 | 8000 | 320 | 250/85 | 0,80 | 0,70 | 250 | 250 | F = 1000 | 0,13 | 0,04 | 125 | TP50/105 |
| | TD285N | 1200 … 1600 | 450 | 8000 | 320 | 285/92 | 0,80 | 0,70 | 250 | 250 | F = 1000 | 0,117 | 0,04 | 135 | TP50/105 |
| | TD330N | 1200 … 1600 | 520 | 8000 | 320 | 330/85 | 0,80 | 0,60 | 250 | 250 | F = 1000 | 0,117 | 0,04 | 135 | TP50/105 |
| Baseplate = 60 mm | TD240N | 2800 … 3600 | 700 | 5500 | 151 | 240/85 | 1,17 | 1,70 | 100 | 350 | F = 1000 | 0,078 | 0,02 | 125 | TP60/105 |
| | TD310N | 2000 … 2600 | 700 | 9000 | 405 | 310/85 | 1,00 | 0,86 | 120 | 300 | F = 1000 | 0,078 | 0,02 | 125 | TP60/105 |
| | TD375N | 1800 … 2200 | 908 | 10600 | 561 | 375/85 | 0,85 | 0,56 | 120 | 300 | F = 1000 | 0,078 | 0,02 | 125 | TP60/105 |
| | TD400N | 2000 … 2600 | 800 | 11000 | 605 | 400/85 | 1,00 | 0,50 | 150 | 300 | F = 1000 | 0,065 | 0,02 | 125 | TP60/105 |
| | TD425N | 1200 … 1800 | 800 | 12500 | 781 | 425/85 | 0,90 | 0,30 | 120 | 250 | F = 1000 | 0,078 | 0,02 | 125 | TP60/105 |
| | TD430N | 1800 … 2200 | 800 | 12000 | 720 | 430/85 | 0,95 | 0,45 | 150 | 300 | F = 1000 | 0,065 | 0,02 | 125 | TP60/105 |
| | TD500N | 1000 … 1800 | 900 | 14500 | 1051 | 500/85 | 0,90 | 0,27 | 200 | 250 | F = 1000 | 0,065 | 0,02 | 125 | TP60/105 |
| | TD570 N | 1200 … 1600 | 900 | 14000 | 980 | 570/87 | 0,90 | 0,27 | 200 | 250 | F = 1000 | 0,065 | 0,02 | 135 | TP60/105 |

PowerBLOCK modules are UL recognized  Common anode or cathode on request  * Highest voltage on request  Modules for current source inverter with higher blocking Diodes on request

радиодетали электронные компоненты со склада и под заказ

# Overview PowerBLOCK Diode/Thyristor Modules for Phase Control

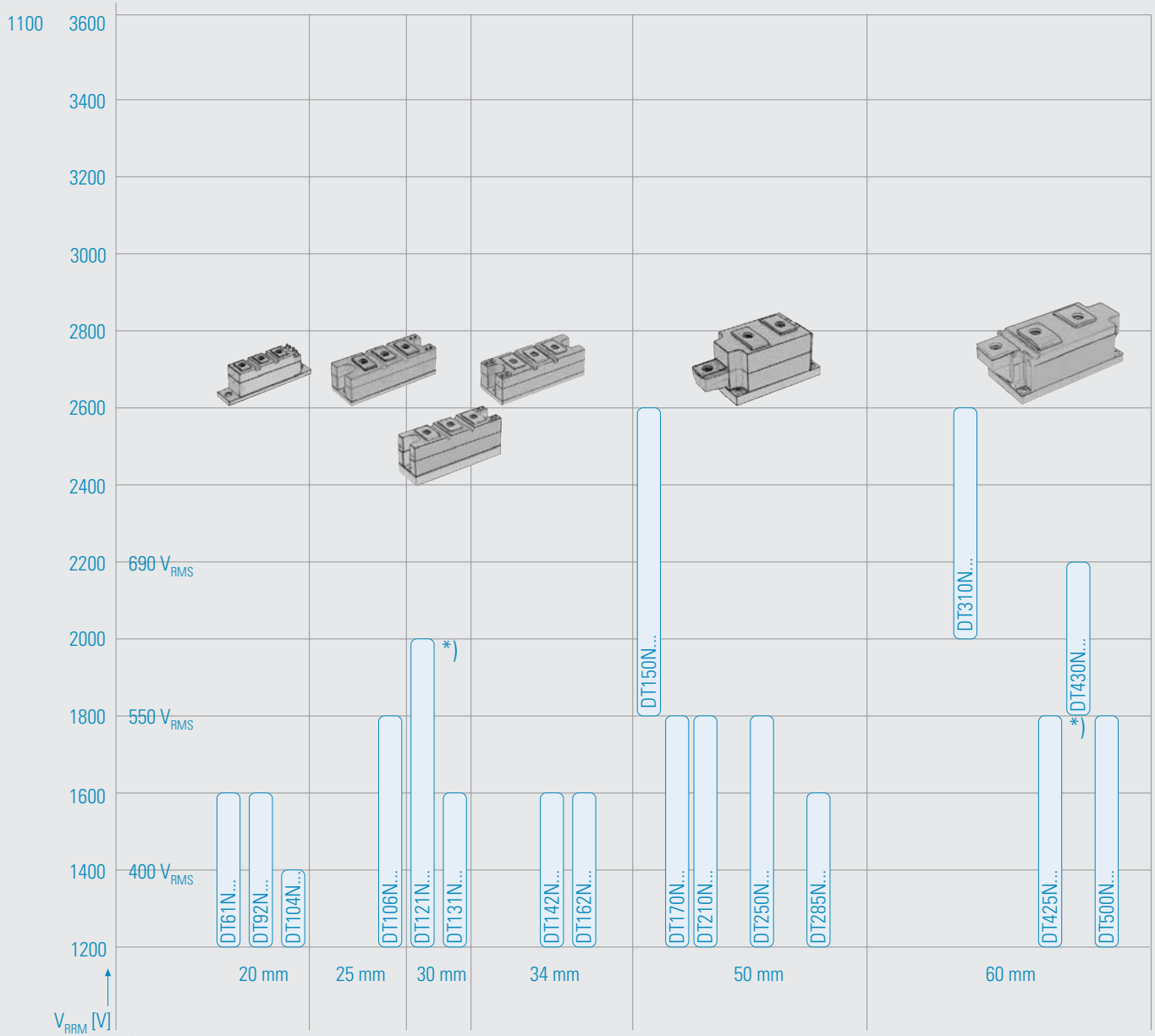


*) highest Voltage on request

г.Минск тел.8(017)2005646 www.fotorele.net модули EUPEC IGBT Infineon minsk17@tut.by



# PowerBLOCK Diode/Thyristor Modules for Phase Control

| 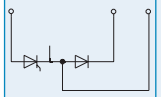 | Type | $V_{DRM}$ $V_{RRM}$ V $V_{DSM} = V_{DRM}$ $V_{RSM} = V_{RRM} + 100$ V | $I_{TRMSM}$ A | $I_{TSM}$ A 10 ms, $T_{vj\,max}$ | $\int i^2dt$ $A^2s \cdot 10^3$ 10 ms, $T_{vj\,max}$ | $I_{TAVM}/T_c$ A/°C 180° el sin | $V_{(TO)}$ V $T_{vj} = T_{vj\,max}$ | $r_T$ mΩ $T_{vj} = T_{vj\,max}$ | $(di/dt)_{cr}$ A/µs DIN IEC 747 - 6 | $t_q$ µs typ. | $(dv/dt)_{cr}$ V/µs DIN IEC 747 - 6 | $R_{thJC}$ °C/W 180° el sin | $R_{thCK}$ °C/W | $T_{vj\,max}$ °C | Outline / page |
|---|---|---|---|---|---|---|---|---|---|---|---|---|---|---|---|
| Baseplate = 20 mm | DT61N | 1200 … 1600 | 120 | 1400 | 9,8 | 60/85 | 0,80 | 3,40 | 150 | 120 | F = 1000 | 0,52 | 0,16 | 125 | TP20/105 |
| | DT92N | 1200 … 1600 | 160 | 1800 | 16,2 | 92/85 | 0,85 | 2,15 | 150 | 150 | F = 1000 | 0,37 | 0,10 | 130 | TP20/105 |
| | DT104N | 1200 … 1400 | 160 | 1800 | 16,2 | 104/85 | 0,85 | 2,15 | 150 | 150 | F = 1000 | 0,37 | 0,10 | 140 | TP20/105 |
| Baseplate = 25 mm | DT106N | 1200 … 1800 | 180 | 2000 | 20,0 | 106/85 | 0,90 | 2,60 | 150 | 150 | F = 1000 | 0,33 | 0,08 | 140 | TP25/105 |
| Baseplate = 30 mm | DT121N | 1200 … 2000* | 200 | 2350 | 27,6 | 121/85 | 0,85 | 2,00 | 150 | 180 | F = 1000 | 0,23 | 0,06 | 125 | TP30/105 |
| | DT131N | 1200 … 1600 | 220 | 3200 | 51,2 | 131/85 | 0,85 | 1,50 | 150 | 180 | F = 1000 | 0,23 | 0,06 | 125 | TP30/105 |
| Baseplate = 34 mm | DT142N | 1200 … 1600 | 230 | 4100 | 84 | 142/85 | 0,90 | 1,10 | 150 | 200 | F = 1000 | 0,22 | 0,06 | 125 | TP34/105 |
| | DT162N | 1200 … 1600 | 260 | 4400 | 97 | 162/85 | 0,85 | 0,95 | 150 | 200 | F = 1000 | 0,20 | 0,06 | 125 | TP34/105 |
| Baseplate = 50 mm | DT150N | 1800 … 2600 | 350 | 4000 | 80 | 150/85 | 1,20 | 2,30 | 60 | 300 | F = 1000 | 0,13 | 0,04 | 125 | TP50/105 |
| | DT170N | 1200 … 1800 | 350 | 4600 | 106 | 170/85 | 0,95 | 1,00 | 150 | 250 | F = 1000 | 0,17 | 0,04 | 125 | TP50/105 |
| | DT210N | 1200 … 1800 | 410 | 5800 | 168 | 210/85 | 1,00 | 0,85 | 150 | 200 | F = 1000 | 0,13 | 0,04 | 125 | TP50/105 |
| | DT250N | 1200 … 1800 | 410 | 7000 | 245 | 250/85 | 0,80 | 0,70 | 150 | 250 | F = 1000 | 0,13 | 0,04 | 125 | TP50/105 |
| | DT285N | 1200 … 1600 | 450 | 8000 | 320 | 285/92 | 0,80 | 0,70 | 250 | 250 | F = 1000 | 0,13 | 0,04 | 135 | TP50/105 |
| Baseplate = 60 mm | DT310N | 2000 … 2600 | 700 | 9000 | 405 | 310/85 | 1,00 | 0,86 | 120 | 300 | F = 1000 | 0,078 | 0,02 | 125 | TP60/105 |
| | DT425N | 1200 … 1800 | 800 | 12500 | 781 | 425/85 | 0,90 | 0,30 | 120 | 250 | F = 1000 | 0,078 | 0,02 | 125 | TP60/105 |
| | DT430N | 1800 … 2200 | 800 | 12000 | 720 | 430/85 | 0,95 | 0,45 | 150 | 300 | F = 1000 | 0,065 | 0,02 | 125 | TP60/105 |
| | DT500N | 1200 … 1800 | 900 | 14500 | 1051 | 500/85 | 0,90 | 0,27 | 200 | 250 | F = 1000 | 0,065 | 0,02 | 125 | TP60/105 |

PowerBLOCK modules are UL recognized  Common anode or cathode on request  * Highest voltage on request  Modules for current source inverter with higher blocking Diodes on request

радиодетали электронные компоненты со склада и под заказ

# Overview PowerBLOCK Diode Modules for Phase Control

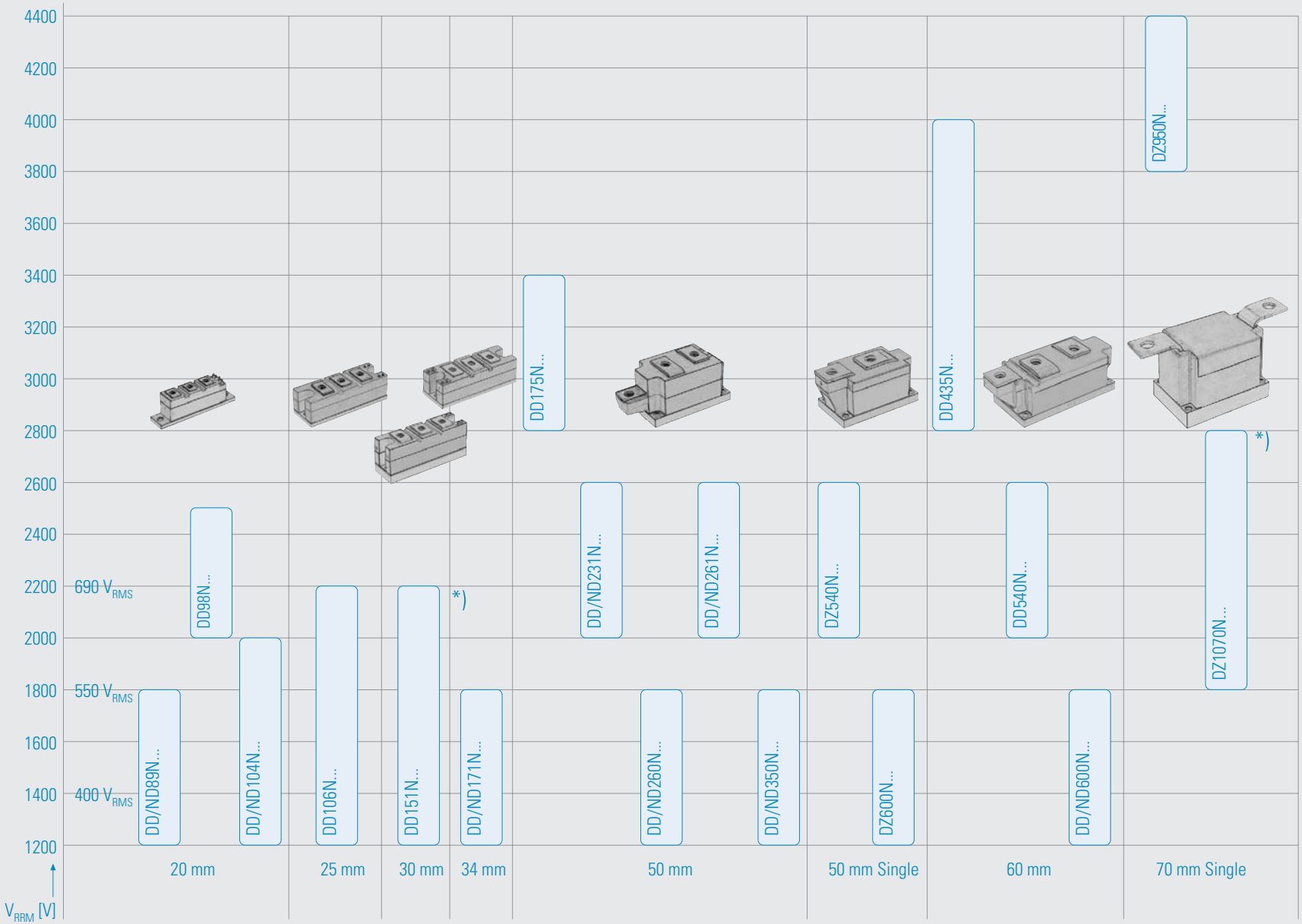


*) highest Voltage on request

г.Минск тел.8(017)2005646 www.fotorele.net модули EUPEC IGBT Infineon minsk17@tut.by



# PowerBLOCK Rectifier Diode Modules for Phase Control

| | Type | $V_{RRM}$ V $V_{RSM} = V_{RRM} + 100V$ | $I_{FRMSM}$ A | $I_{FSM}$ A 10 ms, $T_{vj\,max}$ | $\int i^2dt$ $A^2s \cdot 10^3$ 10 ms, $T_{vj\,max}$ | $I_{FAVM}/T_c$ A/°C | $V_{(TO)}$ V $T_{vj} = T_{vj\,max}$ | $r_T$ mΩ $T_{vj} = T_{vj\,max}$ | $R_{thJC}$ °C/W 180° el sin | $R_{thCK}$ °C/W | $T_{vj\,max}$ °C | Outline / page |
|---|---|---|---|---|---|---|---|---|---|---|---|---|
| Baseplate = 20 mm | DD 89 N | 1200 … 1800 | 140 | 2400 | 28,8 | 89/100 | 0,75 | 2,3 | 0,45 | 0,1 | 150 | DP20/106 |
| | ND 89 N | 1200 … 1800 | 140 | 2400 | 28,8 | 89/100 | 0,75 | 2,3 | 0,45 | 0,1 | 150 | DP20/106 |
| | DD 98 N | 2000 … 2500 | 160 | 2000 | 20 | 98/100 | 0,82 | 2 | 0,39 | 0,1 | 150 | DP20/106 |
| | DD 104 N | 1200 … 1800 | 160 | 2500 | 31,25 | 104/100 | 0,70 | 2,1 | 0,39 | 0,1 | 150 | DP20/106 |
| | ND 104 N | 1200 … 1800 | 160 | 2500 | 31,25 | 104/100 | 0,70 | 2,1 | 0,39 | 0,1 | 150 | DP20/106 |
| Baseplate = 25 mm | DD 106 N | 1200 … 2200 | 180 | 2600 | 33,8 | 106/100 | 0,70 | 2 | 0,39 | 0,08 | 150 | DP25/106 |
| Baseplate = 30 mm | DD 151 N | 1200 … 2200* | 240 | 4600 | 105,8 | 151/100 | 0,75 | 0,9 | 0,3 | 0,06 | 150 | DP30/106 |
| Baseplate = 34 mm | DD 171 N | 1200 … 1800 | 270 | 5600 | 157 | 170/100 | 0,75 | 0,8 | 0,26 | 0,06 | 150 | DP34/107 |
| | ND 171 N | 1200 … 1800 | 270 | 5600 | 157 | 170/100 | 0,75 | 0,8 | 0,26 | 0,06 | 150 | DP34/107 |
| Baseplate = 50 mm | DD 175 N | 3000 … 3400 | 350 | 4000 | 80 | 175/100 | 0,90 | 1,8 | 0,17 | 0,04 | 150 | DP50/107 |
| | DD 231 N | 2000 … 2600 | 410 | 6400 | 205 | 231/100 | 0,80 | 0,84 | 0,17 | 0,04 | 150 | DP50/107 |
| | ND 231 N | 2000 … 2600 | 410 | 6400 | 205 | 231/100 | 0,80 | 0,84 | 0,17 | 0,04 | 150 | DP50ND/107 |
| | DD 260 N | 1200 … 1800 | 410 | 8300 | 344 | 260/100 | 0,70 | 0,68 | 0,17 | 0,04 | 150 | DP50/107 |
| | ND 260 N | 1200 … 1800 | 410 | 8300 | 344 | 260/100 | 0,70 | 0,68 | 0,17 | 0,04 | 150 | DP50ND/107 |
| | DD 261 N | 2000 … 2600 | 410 | 8300 | 344 | 260/100 | 0,70 | 0,68 | 0,17 | 0,04 | 150 | DP50/107 |
| | ND 261 N | 2000 … 2600 | 410 | 8300 | 344 | 260/100 | 0,70 | 0,68 | 0,17 | 0,04 | 150 | DP50ND/107 |
| | DD 285 N | 400 … 800[1)] | 450 | 8300 | 344 | 285/100 | 0,75 | 0,4 | 0,17 | 0,04 | 150 | DP50/107 |
| | DD 350 N | 1200 … 1800 | 550 | 11000 | 605 | 350/100 | 0,75 | 0,4 | 0,13 | 0,04 | 150 | DP50/107 |
| | ND 350 N | 1200 … 1800 | 550 | 11000 | 605 | 350/100 | 0,75 | 0,4 | 0,13 | 0,04 | 150 | DP50ND/107 |
| | ◆ DZ 435 N | 2800 … 4000 | 1100 | 12000 | 720 | 435/100 | 0,84 | 0,6 | 0,078 | 0,02 | 150 | DP50.1/107 |
| | DZ 540 N | 2000 … 2600 | 1150 | 14000 | 980 | 540/100 | 0,78 | 0,31 | 0,078 | 0,02 | 150 | DP50.1/107 |
| | DZ 600 N | 1200 … 1800 | 1150 | 19000 | 1805 | 600/100 | 0,75 | 0,215 | 0,078 | 0,02 | 150 | DP50.1/107 |
| | ◆ DZ 700 N | 1800 … 2200 | 1150 | 21000 | 2205 | 700/100 | 0,78 | 0,185 | 0,065 | 0,02 | 150 | DP60/107 |
| Baseplate = 60 mm | DD 435 N | 2800 … 4000 | 900 | 12000 | 720 | 435/100 | 0,84 | 0,6 | 0,078 | 0,02 | 150 | DP60/107 |
| | DD 540 N | 2000 … 2600 | 900 | 14000 | 980 | 540/100 | 0,78 | 0,31 | 0,078 | 0,02 | 150 | DP60/107 |
| | DD 600 N | 1200 … 1800 | 950 | 19000 | 1800 | 600/100 | 0,75 | 0,215 | 0,078 | 0,02 | 150 | DP60/107 |
| | ND 600 N | 1200 … 1800 | 950 | 19000 | 1800 | 600/100 | 0,75 | 0,215 | 0,078 | 0,02 | 150 | DP60/107 |
| | ◆ DD 700N | 1800 … 2200 | 1100 | 21000 | 2205 | 700/100 | 0,78 | 0,185 | 0,065 | 0,02 | 150 | DP60/107 |
| Baseplate = 70 mm | DZ 950 N | 3600 … 4400 | 1500 | 29000 | 4205 | 950/100 | 0,85 | 0,28 | 0,042 | 0,01 | 150 | DP70/107 |
| | DZ 1070 N | 1800 … 2800* | 1700 | 35000 | 6125 | 1070/100 | 0,80 | 0,17 | 0,045 | 0,01 | 160 | DP70/107 |

PowerBLOCK modules are UL recognized  Common anode or cathode on request  * Highest voltage on request

■ Not for new design  ◆ New type  [1)] $V_{RSM} = V_{RRM} + 50V$

радиодетали электронные компоненты со склада и под заказ

# PowerBLOCK Fast Thyristor Modules

| | Type | $V_{DRM}$ $V_{RRM}$ V $V_{DSM} = V_{DRM}$ $V_{RSM} = V_{RRM} + 100$ V | $I_{TRMSM}$ A | $I_{TSM}$ A 10 ms, $T_{vj\,max}$ | $\int i^2dt$ $A^2s \cdot 10^3$ 10 ms, $T_{vj\,max}$ | $I_{TAVM}/T_c$ A/°C 180° el sin | $V_{(TO)}$ V $T_{vj} = T_{vj\,max}$ | $r_T$ mΩ $T_{vj} = T_{vj\,max}$ | $(di/dt)_{cr}$ A/µs DIN IEC 747 - 6 | $t_q$ µs typ. | $(dv/dt)_{cr}$ V/µs DIN IEC 747 - 6 | $R_{thJC}$ °C/W 180° el sin | $R_{thCK}$ °C/W | $T_{vj\,max}$ °C | Outline / page |
|---|---|---|---|---|---|---|---|---|---|---|---|---|---|---|---|
| Baseplate = 20 mm | TT 46 F | 800 … 1200 | 120 | 1150 | 6,60 | 45/85 | 1,30 | 3,4 | 120 | F ≤ 25 | C = 500 | 0,52 | 0,16 | 125 | TP20/105 |
| | TD 46 F | | | | | | | | | | | | | | |
| | DT 46 F | | | | | | | | | | | | | | |
| Baseplate = 25 mm | TT 60 F | 800 … 1300* | 150 | 1300 | 8,45 | 60/85 | 1,30 | 4 | 200 | F ≤ 25 | C = 500 | 0,35 | 0,08 | 125 | TP25/105 |
| | | | | | | | | | | E ≤ 20 | | | | | |
| Baseplate = 30 mm | TT 71 F | 1000 … 1300 | 180 | 2100 | 22,00 | 71/85 | 1,30 | 3,1 | 160 | F ≤ 25 | C = 500 | 0,3 | 0,06 | 125 | TP30/105 |
| | TD 71 F | | | | | | | | | E ≤ 20 | | | | | |
| | DT 71 F | | | | | | | | | | | | | | |
| | TT 81 F [1] | 400 … 800 | 180 | 2200 | 24,20 | 81/85 | 1,25 | 2 | 160 | E ≤ 20 | C = 500 | 0,3 | 0,06 | 125 | TP30/105 |
| | TD 81 F [1] | | | | | | | | | F ≤ 25 | | | | | |
| | DT 81 F [1] | | | | | | | | | | | | | | |
| | TT 101 F | 1000 … 1300 | 200 | 2400 | 28,80 | 101/85 | 1,20 | 2,1 | 160 | F ≤ 25 | C = 500 | 0,23 | 0,06 | 125 | TP30/105 |
| | TD 101 F | | | | | | | | | | | | | | |
| | DT 101 F | | | | | | | | | | | | | | |
| | TT 111 F [1] | 800 … 1000 | 200 | 2600 | 33,80 | 111/85 | 1,20 | 1,4 | 200 | E ≤ 20 | C = 500 | 0,23 | 0,06 | 125 | TP30/105 |
| | TD 111 F [1] | | | | | | | | | F ≤ 25 | | | | | |
| | DT 111 F [1] | | | | | | | | | | | | | | |
| Baseplate = 50 mm | TT 180 F | 1000 … 1300* | 350 | 6000 | 180,00 | 180/85 | 1,30 | 0,9 | 200 | F ≤ 25 | C = 500 | 0,13 | 0,04 | 125 | TP50/105 |
| | TD 180 F | | | | | | | | | E ≤ 20 | | | | | |
| | DT 180 F | | | | | | | | | S ≤ 18 | | | | | |
| | TT 200 F | 1000 … 1300* | 410 | 6400 | 205,00 | 200/85 | 1,20 | 0,75 | 200 | F ≤ 25 | C = 500 | 0,13 | 0,04 | 125 | TP50/105 |
| | TD 200 F | | | | | | | | | E ≤ 20 | | | | | |
| | DT 200 F | | | | | | | | | S ≤ 18 | | | | | |
| | TZ 335 F | 1000 … 1200 | 700 | 10000 | 500,00 | 335/85 | 1,15 | 0,42 | 200 | G ≤ 30 | C = 500 | 0,08 | 0,02 | 125 | TP50.1/105 |
| | | | | | | | | | | F ≤ 25 | | | | | |

PowerBLOCK modules are UL recognized  Common anode or cathode on request  * Highest voltage on request

[1] $V_{RRM} \leq 1000$ V : $V_{RSM} = V_{RRM} + 50$ V

г.Минск тел.8(017)2005646 www.fotorele.net модули EUPEC IGBT Infineon minsk17@tut.by



# PowerBLOCK Fast Asymmetric Thyristor Modules

| | Type | $V_{DRM}$<br>$V_{RRM}$ V<br>$V_{DSM} = V_{DRM}$ | $V_{RRM}$<br>$V_{RRM}$<br>[($V_{RRM(C)}$)<br>$t_p = 1\mu s$] | $I_{TRMSM}$<br>A | $I_{TSM}$<br>A<br>10 ms,<br>$T_{vj\,max}$ | $\int i^2dt$<br>$A^2s \cdot 10^3$<br>10 ms,<br>$T_{vj\,max}$ | $I_{TAVM}/T_c$<br>A/°C<br>180° el sin | $V_{(TO)}$<br>V<br>$T_{vj} = T_{vj\,max}$ | $r_T$<br>mΩ<br>$T_{vj} = T_{vj\,max}$ | $(di/dt)_{cr}$<br>A/µs<br>DIN<br>IEC 747 - 6 | $t_q$<br>µs<br>typ. | $(dv/dt)_{cr}$<br>V/µs<br>DIN IEC<br>747 - 6 | $R_{thJC}$<br>°C/W<br>180° el sin | $R_{thCK}$<br>°C/W | $T_{vj\,max}$<br>°C | Outline /<br>page |
|---|---|---|---|---|---|---|---|---|---|---|---|---|---|---|---|---|
| Baseplate<br>= 20 mm | AD 50 F | 1000 … 1200* | 15 | 120 | 1300 | 8,45 | 50/85 | 1,30 | 3,75 | 120 | D ≤ 15 | C = 500 | 0,45 | 0,16 | 125 | TP20/105 |
| | | | [50] | | | | | | | | C ≤ 12 | F = 1000 | | | | |
| | | | | | | | | | | | B ≤ 10 | | | | | |
| 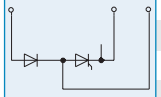 | AD 60 F | 1000 … 1200* | 15 | 150 | 1450 | 10,5 | 60/85 | 1,20 | 208 | 120 | D ≤ 15 | C = 500 | 0,39 | 0,16 | 125 | TP20/105 |
| | | | [50] | | | | | | | | C ≤ 12 | F = 1000 | | | | |
| | | | | | | | | | | | B ≤ 10 | | | | | |
| Baseplate<br>= 34 mm | AD 96 S | 800 … 1200* | 15 | 200 | 2350 | 27,60 | 95/85 | 1,30 | 2,15 | 400 | D ≤ 15 | C = 500 | 0,23 | 0,06 | 125 | TP34/105 |
| | | | [50] | | | | | | | | C ≤ 12 | F = 1000 | | | | |
| | | | | | | | | | | | B ≤ 10 | | | | | |
| 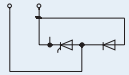 | | | | | | | | | | | A ≤ 8 | | | | | |
| | AD 116 S | 800 … 1200 | 15 | 220 | 2600 | 33,80 | 115/85 | 1,10 | 1,45 | 400 | E ≤ 20 | C = 500 | 0,23 | 0,06 | 125 | TP34/105 |
| | | | [50] | | | | | | | | D ≤ 15 | F = 1000 | | | | |
| Baseplate<br>= 50 mm | AD 180 S | 800 … 1300* | 15 | 350 | 4800 | 115,00 | 180/85 | 1,30 | 0,9 | 500 | D ≤ 15 | C = 500 | 0,13 | 0,04 | 125 | TP50/105 |
| | | | [50] | | | | | | | | C ≤ 12 | F = 1000 | | | | |
| | | | | | | | | | | | B ≤ 10 | | | | | |
| 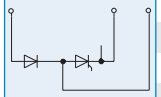 | | | | | | | | | | | A ≤ 8 | | | | | |
| | AD 220 S | 800 … 1300* | 15 | 410 | 5200 | 135,00 | 220/85 | 1,10 | 0,6 | 500 | F ≤ 25 | C = 500 | 0,13 | 0,04 | 125 | TP50/105 |
| | | | [50] | | | | | | | | E ≤ 20 | F = 1000 | | | | |
| | | | | | | | | | | | D ≤ 15 | | | | | |

PowerBLOCK modules are UL recognized * Highest voltage on request

радиодетали электронные компоненты со склада и под заказ

# PowerBLOCK Fast Diode Modules

| 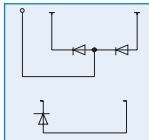 | Type | $V_{RRM}$ V $V_{RSM}$ = $V_{RRM}$ + 100V (50 Hz) | $I_{FRMSM}$ A | $I_{FSM}$ A 10 ms, $T_{vj\,max}$ | $\int i^2dt$ $A^2s \cdot 10^3$ 10 ms, $T_{vj\,max}$ | $I_{FAVM}/T_c$ A/°C | $V_{(TO)}$ V $T_{vj} = T_{vj\,max}$ | $r_T$ mΩ $T_{vj} = T_{vj\,max}$ | $I_{RM}$ A $T_{vj} = T_{vj\,max}$ -di/dt = 100 A/µs | $R_{thJC}$ °C/W 180° el sin | $R_{thCK}$ °C/W | $T_{vj\,max}$ °C | Outline / page |
|---|---|---|---|---|---|---|---|---|---|---|---|---|---|
| Baseplate = 20 mm | DD 46 S | 800 … 1200 [1] | 100 | 850 | 3,60 | 45/85 | 0,90 | 3,9 | | 0,68 | 0,16 | 125 | DP20/106 |
| | DD 61 S | 1000 … 1400 [1] | 120 | 1600 | 12,80 | 61/100 | 1,00 | 2,2 | 82 | 0,62 | 0,16 | 150 | DP20/106 |
| | DD 62 S | 400 … 1000 [1] | 120 | 1600 | 12,80 | 61/100 | 1,00 | 2,2 | 62 | 0,62 | 0,16 | 150 | DP20/106 |
| | DD 81 S | 1000 … 1400 | 150 | 1900 | 18,05 | 81/100 | 0,95 | 1,7 | 87 | 0,48 | 0,16 | 150 | DP20/106 |
| | DD 82 S | 400 … 1000 [1] | 150 | 1900 | 18,05 | 81/100 | 0,95 | 1,7 | 65 | 0,48 | 0,16 | 150 | DP20/106 |
| Baseplate = 30 mm | DD 121 S | 1000 … 1400 | 200 | 2000 | 20,00 | 121/100 | 0,95 | 1,7 | 95 | 0,28 | 0,06 | 150 | DP30/106 |
| | DD 122 S | 400 … 1000 [1] | 200 | 2000 | 20,00 | 121/100 | 0,95 | 1,7 | 70 | 0,28 | 0,06 | 150 | DP30/106 |
| Baseplate = 50 mm | DD 230 S | 1800 … 2600 | 410 | 7500 | 281,00 | 230/100 | 1,00 | 0,8 | | 0,15 | 0,04 | 150 | DP50/107 |
| | ND 230 S | 1800 … 2600 | 410 | 7500 | 281,00 | 230/100 | 1,00 | 0,8 | | 0,15 | 0,04 | 150 | DP50ND/107 |
| | DD 241 S | 1000 … 1400 | 410 | 7500 | 281,00 | 240/100 | 1,10 | 0,5 | 135 | 0,15 | 0,04 | 150 | DP50/107 |
| | ND 241 S | 1000 … 1400 | 410 | 7500 | 281,00 | 240/100 | 1,10 | 0,5 | 135 | 0,15 | 0,04 | 150 | DP50ND/107 |
| | DD 242 S | 600 … 1000 [1] | 410 | 7500 | 281,00 | 240/100 | 1,10 | 0,5 | 98 | 0,15 | 0,04 | 150 | DP50/107 |
| | ND 242 S | 600 … 1000 [1] | 410 | 7500 | 281,00 | 240/100 | 1,10 | 0,5 | 98 | 0,15 | 0,04 | 150 | DP50ND/107 |

PowerBLOCK modules are UL recognized

Common anode or cathode on request

[1] $V_{RRM} \leq 1000$ V : $V_{RSM} = V_{RRM}$ +50 V



радиодетали электронные компоненты со склада и под заказ

г.Минск тел.8(017)2005646 www.fotorele.net модули EUPEC IGBT Infineon minsk17@tut.by



# Overview Phase Control Thyristors in Disc Housings

$V_{DRM}$ - Concept

| | | | | | | | | | | | | | | | | |
|---|---|---|---|---|---|---|---|---|---|---|---|---|---|---|---|---|
| 8000 V | | | | | | | | | | | | | | | T1503N<br>T1901N<br>T2251N | T2563N<br>T2871N |
| 7000 V | | | | | | T201N<br>T281N | | | | T501N<br>T551N<br>T553N<br>T571N | | | T1081N<br>T1201N | T1851N<br>T1651N | | |
| 5200 V | | | | | | | | | | | | | T1551N | T2351N | T3441N | T4003N |
| 5000 V | | | | | | | | | | | | | T1451N | T2161N | T2401N | T4021N |
| 4800 V | 1500 $V_{RMS}$ | | | | | | | | | | | | | | T2851N | |
| | | | | | | | | | | | | | Pellet ∅ | 88,5 mm | | |
| | | | | | | | | | | | | | Case ∅ | 120 mm | | |
| 4400 V | | | | | | | | | | T731 | | | T1971N<br>T1401N | | T3101N | |
| 4200 V | | | | | | | T379N | | | | T729N | | | | | |
| 4000 V | | | | | | | | | | | | High Power-Discs | | | | |
| 3800 V | | | | | | T380N | | | | | | | | | | |
| 3600 V | 1100 $V_{RMS}$ | | | | | | | | | T901N | | | T2001N | T1929N | T3401N | |
| 3400 V | | | | | | | | | | T869N | | | T1601N | | T3801N | |
| 3200 V | | | | | | | | | | | | | | | T4301N | |
| 2900 V | | | | | | | | | | | | | | | T4771N | |
| 2600 V | | | | T308N | | T459N | T659N | T829N | | | T1219N | T1589N | T2101N | T2479N | | |
| 2400 V | | | | | | | | | | | | | | | | |
| 2200 V | 690 $V_{RMS}$ | | | | | T639N | T699N | | T1039N | | T1329N | T1869N | | T2709N | | |
| 2000 V | | | | | | | | | | | | | | | | |
| 1800 V | 550 $V_{RMS}$ | T218N | T358N | T508N | T588N | | T879N | T1049N | T1189N | | T1509N | T1989N | | T3159N | | |
| 1600 V | | T298N | T378N | | | T719N | | | | | | | | | | |
| 1400 V | 400 $V_{RMS}$ | | | | T618N | | | | | | | | | | | |
| 1200 V | | | Epoxy-Discs | | | | | | | | | | | | | |
| 600 V | T348N | T398N | T568N | T828N | T1078N | T1258N | | | | | T2509N | T3709N | | | | |
| 400 V | | | | | | | | | | | | | | | | |
| Pellet ∅ | 21 mm | 23 mm | 25 mm | 30 mm | 32 mm | 38 mm | 42 mm | 46 mm | 51 mm | 55/56 mm | 58 mm | 65 mm | 75 mm | 80 mm | 100 mm | 119 mm |
| Case ∅ | 41 mm | | | 50 mm | | 57/60 mm | | 75 mm | | | | 100 mm | 120 mm | 110 mm | 150 mm | 170 mm |

Ceramic Disc

Epoxy Disc

радиодетали электронные компоненты со склада и под заказ

# Pulsed Power Applications

| Type | $V_{BO}$ kV | $V_{RRM}$ kV | $V_{TM}/I_{TM}$ V/kA | $I_{TSM}$ kA | $di/dt_{cr(on)}$ A/µs single pulse | $di/dt_{cr(off)}$ A/µs single pulse | $R_{thJC}$ °C/W | $T_{vj\ max}$ °C | Outline / page |
|---|---|---|---|---|---|---|---|---|---|
| T 4003 NH | 5,2 | 5,4 | 1,8/5 | 100 | 5000 | | 0,0045 | 120 | T172.40L/112 |
| T 1503 NH | 7,5 | 7,7 … 8,2 | 3,0/4 | 55 | 5000 | | 0,006 | 120 | T150.40L/112 |
| T 2563 NH | 7,5 | 7,7 … 8,2 | 2,95/5 | 90 | 5000 | | 0,0045 | 120 | T172.40L/112 |
| D 2601 NH | | 9 | 5,5/4 | 22 | | 7500 | 0,0075 | 140 | D120.26K/116 |

# Traction Crow Bar

| Type | $V_{DRM}$ kV | $V_{RRM}$ kV | $V_{D\ DC}$ kV | $V_{TM}/I_{TM}$ V/kA | $I_{TSM}$ kA | $di/dt_{cr(on)}$ A/µs single pulse | $R_{thJC}$ °C/W | $T_{vj\ max}$ °C | Outline / page |
|---|---|---|---|---|---|---|---|---|---|
| T 1101 N | 3 | 3 | typ 1,5 | 2,0/4 | 29 | 1000 | 0,012 | 125 | T100.26K/111 |
| D 2201 N | | 4,5 | typ 2,5 | 1,2/2,5 | 35 | | 0,01 | 140 | D100.26K/116 |

г.Минск тел.8(017)2005646 www.fotorele.net модули EUPEC IGBT Infineon minsk17@tut.by



# Phase Control Thyristors

## up to 600 V

| Type | $V_{DRM}$ [2] $V_{RRM}$ V $V_{DSM} = V_{DRM}$ $V_{RSM} = V_{RRM}$ + 50 V | $I_{TRMSM}$ A | $\int i^2dt$ $A^2s \cdot 10^3$ 10 ms, $T_{vj\,max}$ | $I_{TSM}$ kA 10 ms, $T_{vj\,max}$ | $V_T/I_T$ V/kA $T_{vj\,max}$ | $I_{TAVM}$ A/°C 180 ° el sin $T_c = 85$ °C | $V_{(TO)}$ V $T_{vj} = T_{vj\,max}$ | $r_T$ mΩ $T_{vj} = T_{vj\,max}$ | $(di/dt)_{cr}$ A/µs DIN IEC 747 - 6 | $t_q$ µs typ. | $(dv/dt)_{cr}$ V/µs DIN IEC 747 - 6 | $R_{thJC}$ °C/W 180 ° el sin | $T_{vj\,max}$ °C | Outline / page |
|---|---|---|---|---|---|---|---|---|---|---|---|---|---|---|
| T 210 N | 200 … 600 | 330 | 151 | 5,5 | 1,33/0,6 | 210 | 0,80 | 0,850 | 200 | 200 | F = 1000 | 0,1500 | 140 | TSW27/108 |
| T 348 N | 200 … 600 | 600 | 80 | 4,0 | 1,92/1,1 | 348 | 1,00 | 0,700 | 200 | 200 | F = 1000 | 0,1000 | 140 | T41.14/109 |
| T 398 N | 200 … 600 | 800 | 151 | 5,5 | 1,63/1,5 | 398 | 1,00 | 0,400 | 200 | 200 | F = 1000 | 0,1000 | 140 | T41.14/109 |
| T 568 N | 200 … 600 | 900 | 225 | 6,7 | 1,76/2,0 | 568 | 0,80 | 0,440 | 200 | 200 | F = 1000 | 0,0680 | 140 | T41.14/109 |
| T 828 N | 200 … 600 | 1500 | 720 | 12,0 | 1,65/2,5 | 828 | 1,00 | 0,230 | 300 | 150 | F = 1000 | 0,0450 | 140 | T50.14/109 |
| T 1078 N | 200 … 600 | 2000 | 1050 | 14,5 | 1,81/3,5 | 1078 | 1,02 | 0,200 | 200 | 150 | F = 1000 | 0,0330 | 140 | T50.14/109 |
| T 1258 N | 200 … 600 | 2500 | 2000 | 20,0 | 1,5/4,5 | 1258 | 1,00 | 0,100 | 120 | 200 | F = 1000 | 0,0330 | 140 | T60.14/109 |
| T 2509 N | 200 … 600* | 4900 | 8820 | 42,0 [1] | 1,22/6 | 2509 | 0,75 | 0,072 | 200 | 200 | F = 1000 | 0,0184 | 140 | T75.26/109 |
| T 3709 N | 200 … 600* | 7000 | 18000 | 60,0 [2] | 1,50/15 | 3710 | 0,75 | 0,0475 | 200 | 200 | F = 1000 | 0,0125 | 140 | T100.26/109 |

## up to 1800 V

| Type | $V_{DRM}$ $V_{RRM}$ V $V_{DSM} = V_{DRM}$ $V_{RSM} = V_{RRM}$ + 100 V | $I_{TRMSM}$ A | $\int i^2dt$ $A^2s \cdot 10^3$ 10 ms, $T_{vj\,max}$ | $I_{TSM}$ kA 10 ms, $T_{vj\,max}$ | $V_T/I_T$ V/kA $T_{vj\,max}$ | $I_{TAVM}$ A 180 ° el sin $T_c = 85$ °C | $V_{(TO)}$ V $T_{vj} = T_{vj\,max}$ | $r_T$ mΩ $T_{vj} = T_{vj\,max}$ | $(di/dt)_{cr}$ A/µs DIN IEC 747 - 6 | $t_q$ µs typ. | $(dv/dt)_{cr}$ V/µs DIN IEC 747 - 6 | $R_{thJC}$ °C/W 180 ° el sin | $T_{vj\,max}$ °C | Outline / page |
|---|---|---|---|---|---|---|---|---|---|---|---|---|---|---|
| T 86 N | 1200 … 1800* | 200 | 20 | 2,00 | 1,99/0,4 | 86 | 1,00 | 2,60 | 150 | 200 | F = 1000 | 0,3000 | 125 | TSW27/108 |
| T 130 N | 1200 … 1800 | 300 | 45 | 3,00 | 1,96/0,6 | 130 | 1,08 | 1,53 | 150 | 180 | F = 1000 | 0,2000 | 125 | TSW27/108 |
| | | | | | | | | | | | | | | TFL36/108 |
| T 160 N | 1200 … 1800 | 300 | 58 | 3,40 | 1,96/0,6 | 160 | 1,08 | 1,53 | 150 | 200 | F = 1000 | 0,1500 | 125 | TSW27/108 |
| | | | | | | | | | | | | | | TFL36/108 |
| T 178 N | 1200 … 1800 | 300 | 34 | 2,60 | 1,9/0,6 | 178 | 0,92 | 1,50 | 150 | 180 | F = 1000 | 0,1400 | 125 | T41.14/109 |
| T 218 N | 1200 … 1800 | 400 | 58 | 3,40 | 2,2/0,8 | 218 | 0,90 | 1,35 | 150 | 200 | F = 1000 | 0,1100 | 125 | T41.14/109 |
| T 221 N | 1200 … 1800 | 450 | 163 | 5,70 | 1,74/0,8 | 221 | 1,10 | 0,75 | 150 | 200 | F = 1000 | 0,1200 | 125 | TSW41/108 |
| | | | | | | | | | | | | | | TFL54/108 |
| T 298 N | 600 … 1600 | 600 | 90,6 | 4,25 | 2,0/1,1 | 298 | 0,85 | 0,90 | 150 | 200 | F = 1000 | 0,0880 | 125 | T41.14/109 |
| T 345 N | 1200 … 1800 | 550 | 238 | 6,90 | 1,56/1,0 | 345 | 0,80 | 0,70 | 150 | 250 | F = 1000 | 0,0800 | 125 | TFL54/108 |
| T 358 N | 1200 … 1800 | 700 | 106 | 4,60 | 2,07/1,2 | 358 | 0,85 | 0,90 | 150 | 250 | F = 1000 | 0,0680 | 125 | T41.14/109 |
| T 370 N | 1200 … 1800 | 650 | 320 | 8,00 | 1,65/1,2 | 370 | 0,80 | 0,50 | 200 | 250 | F = 1000 | 0,0850 | 125 | TSW41/108 |
| T 378 N | 1200 … 1600 | 800 | 202 | 6,35 | 1,85/1,2 | 378 | 0,80 | 0,75 | 150 | 250 | F = 1000 | 0,0680 | 125 | T41.14/109 |
| T 388 N | 1200 … 1800 | 730 | 205 | 6,40 | 2,1/1,5 | 388 | 0,90 | 0,75 | 120 | 220 | F = 1000 | 0,0680 | 125 | T50.14/109 |
| T 508 N | 1200 … 1800 | 800 | 238 | 6,90 | 1,92/1,6 | 510 | 0,80 | 0,60 | 120 | 250 | F = 1000 | 0,0530 | 125 | T50.14/109 |
| T 509 N | 1200 … 1800 | 800 | 238 | 6,90 | 1,92/1,6 | 510 | 0,80 | 0,60 | 120 | 250 | F = 1000 | 0,0530 | 125 | T57.26/109 |

* Highest voltage on request

[1] Case non-rupture current 32 kA (sinusoidal half wave 50 Hz)

[2] Case non-rupture current 38 kA

радиодетали электронные компоненты со склада и под заказ

# Phase Control Thyristors

## up to 1800 V

| Type | $V_{DRM}$ $V_{RRM}$ V $V_{DSM} = V_{DRM}$ $V_{RSM} = V_{RRM}$ + 100V | $I_{TRMSM}$ A | $\int i^2dt$ $A^2s \cdot 10^3$ 10 ms $T_{vj\,max}$ | $I_{TSM}$ kA 10 ms $T_{vj\,max}$ | $V_T/I_T$ V/kA $T_{vj\,max}$ | $I_{TAVM}$ A 180 ° el sin $T_c = 85$ °C | $V_{(TO)}$ V $T_{vj} = T_{vj\,max}$ | $r_T$ mΩ $T_{vj} = T_{vj\,max}$ | $(di/dt)_{cr}$ A/µs DIN IEC 747 - 6 | $t_q$ µs typ. | $(dv/dt)_{cr}$ V/µs DIN IEC 747 - 6 | $R_{thJC}$ °C/W 180 ° el sin | $T_{vj\,max}$ °C | Outline / page |
|---|---|---|---|---|---|---|---|---|---|---|---|---|---|---|
| T 588 N | 1200 … 1800 | 1250 | 320 | 8,0 | 2,15/2,4 | 588 | 0,800 | 0,5000 | 200 | 250 | F = 1000 | 0,0450 | 125 | T50.14/109 |
| T 589 N | 1200 … 1800 | 1250 | 320 | 8,0 | 2,15/2,4 | 588 | 0,800 | 0,5000 | 200 | 250 | F = 1000 | 0,0450 | 125 | T57.26/109 |
| T 618 N | 1200 … 1400 | 1250 | 451 | 9,5 | 1,75/2,0 | 618 | 0,800 | 0,4200 | 200 | 250 | F = 1000 | 0,0450 | 125 | T50.14/109 |
| T 619 N | 1200 … 1400 | 1250 | 451 | 9,5 | 1,75/2,0 | 618 | 0,800 | 0,4200 | 200 | 250 | F = 1000 | 0,0450 | 125 | T57.26/109 |
| T 648 N | 1200 … 1600 | 1300 | 605 | 11,0 | 2,1/2,5 | 649 | 1,000 | 0,3800 | 120 | 250 | F = 1000 | 0,0380 | 125 | T60.14/109 |
| T 649 N | 1200 … 1600 | 1300 | 605 | 11,0 | 2,1/2,5 | 649 | 1,000 | 0,3800 | 120 | 250 | F = 1000 | 0,0380 | 125 | T57.26/109 |
| T 718 N | 1200 … 1600 | 1500 | 781 | 12,5 | 1,94/3,0 | 718 | 0,850 | 0,3500 | 120 | 250 | F = 1000 | 0,0380 | 125 | T60.14/109 |
| T 719 N | 1200 … 1600 | 1500 | 781 | 12,5 | 1,94/3,0 | 718 | 0,850 | 0,3500 | 120 | 250 | F = 1000 | 0,0380 | 125 | T57.26/109 |
| T 878 N | 1200 … 1800 | 1750 | 1200 | 15,5 | 1,95/3,6 | 879 | 0,850 | 0,2700 | 200 | 250 | F = 1000 | 0,0320 | 125 | T60.14/109 |
| T 879 N | 1200 … 1800 | 1750 | 1200 | 15,5 | 1,95/3,6 | 879 | 0,850 | 0,2700 | 200 | 250 | F = 1000 | 0,0320 | 125 | T57.26/109 |
| T 1049 N | 1200 … 1800 | 1870 | 1280 | 16,0 | 1,34/1,8 | 1050 | 0,850 | 0,2250 | 200 | 250 | F = 1000 | 0,0265 | 125 | T75.26/109 |
| T 1189 N | 1200 … 1800 | 2800 | 2530 | 22,5 | 2,05/5,4 | 1190 | 0,900 | 0,1900 | 200 | 240 | F = 1000 | 0,0230 | 125 | T75.26/109 |
| T 1500 N | 1200 … 1800 | 3500 | 5611 | 33,5 [1] | 2,1/7,0 | 1500 | 0,900 | 0,1500 | 200 | 240 | F = 1000 | 0,0184 | 125 | T75.26K/110 |
| T 1509 N | 1200 … 1800 | 3500 | 5611 | 33,5 [1] | 2,1/7,0 | 1500 | 0,900 | 0,1500 | 200 | 240 | F = 1000 | 0,0184 | 125 | T75.26/109 |
| T 1986 N | 1200 … 1800 | 4200 | 6480 | 36,0 | 2,05/8,0 | 1990 | 0,900 | 0,1200 | 200 | 250 | F = 1000 | 0,0133 | 125 | T100.35/109 |
| T 1989 N | 1200 … 1800 | 4200 | 6480 | 36,0 | 2,05/8,0 | 1990 | 0,900 | 0,1200 | 200 | 250 | F = 1000 | 0,0133 | 125 | T100.26/109 |
| T 3159 N | 1200 … 1800 | 7000 | 16245 | 57,0 [2] | 1,37/6,0 | 3160 | 0,850 | 0,0820 | 200 | 250 | F = 1000 | 0,0085 | 125 | T110.26/110 |

* Highest voltage on request [1] Case non-rupture current 32 kA (sinusoidal half wave 50 Hz) [2] Case non-rupture current 38 kA



радиодетали электронные компоненты со склада и под заказ

г.Минск тел.8(017)2005646 www.fotorele.net модули EUPEC IGBT Infineon minsk17@tut.by



# Phase Control Thyristors

## up to 3000 V

| Type | $V_{DRM}$ $V_{RRM}$ V $V_{DSM} = V_{DRM}$ $V_{RSM} = V_{RRM}$ + 100V | $I_{TRMSM}$ A | $\int i^2dt$ $A^2s \cdot 10^3$ 10 ms $T_{vj\,max}$ | $I_{TSM}$ kA 10 ms $T_{vj\,max}$ | $V_T/I_T$ V/kA $T_{vj\,max}$ | $I_{TAVM}$ A 180 ° el sin $T_c = 85$ °C | $V_{(TO)}$ V $T_{vj} = T_{vj\,max}$ | $r_T$ mΩ $T_{vj} = T_{vj\,max}$ | $(di/dt)_{cr}$ A/µs DIN IEC 747 - 6 | $t_q$ µs typ. | $(dv/dt)_{cr}$ V/µs DIN IEC 747 - 6 | $R_{thJC}$ °C/W 180 ° el sin | $T_{vj\,max}$ °C | Outline / page |
|---|---|---|---|---|---|---|---|---|---|---|---|---|---|---|
| ■ T 271 N | 2000 … 2500 | 650 | 245 | 7,0 | 2.35/1,2 | 270 | 1,070 | 0,870 | 60 | 300 | C = 500 | 0,0910 | 125 | TSW41/108 |
| | | | | | | | | | | | F = 1000 | | | |
| T 308 N | 2000 … 2600* | 550 | 101 | 4,5 | 2,88/1,1 | 308 | 1,100 | 1,600 | 60 | 350 | C = 500 | 0,0560 | 125 | T50.14/109 |
| | | | | | | | | | | | F = 1000 | | | |
| T 458 N | 2000 … 2600 | 1000 | 405 | 9,0 | 2,75/2,0 | 459 | 1,000 | 0,840 | 120 | 300 | C = 500 | 0,0455 | 125 | T60.14/109 |
| T 459 N | | | | | | | | | | | F = 1000 | | | T57.26/109 |
| T 639 N | 1800 … 2200 | 1250 | 562 | 10,6 | 1,88/1,8 | 640 | 0,850 | 0,510 | 120 | 400 | F = 1000 | 0,0377 | 125 | T57.26/109 |
| T 658 N | 2200 … 2600 | 1500 | 660 | 11,5 | 2,53/2,85 | 659 | 1,000 | 0,500 | 150 | 300 | F = 1000 | 0,0330 | 125 | T60.14/109 |
| T 659 N | 2200 … 2600 | 1500 | 660 | 11,5 | 2,53/2,85 | 659 | 1,000 | 0,500 | 150 | 300 | F = 1000 | 0,0330 | 125 | T57.26/109 |
| T 699 N | 1800 … 2200 | 1500 | 744 | 12,2 | 2,32/2,85 | 699 | 0,950 | 0,450 | 200 | 300 | F = 1000 | 0,0320 | 125 | T57.26/109 |
| T 708 N | 1800 … 2200 | 1500 | 744 | 12,2 | 2,32/2,85 | 699 | 0,950 | 0,450 | 200 | 300 | F = 1000 | 0,0320 | 125 | T60.14/109 |
| T 709 N | 2000 … 2600 | 1500 | 845 | 13,0 | 2,84/3,0 | 700 | 1,050 | 0,530 | 50 | 300 | C = 500 | 0,0290 | 125 | T75.26/109 |
| | | | | | | | | | | | F = 1000 | | | |
| T 829 N | 2000 … 2600 | 1800 | 1201 | 15,5 | 1,78/1,8 | 829 | 0,950 | 0,425 | 50 | 350 | F = 1000 | 0,0265 | 125 | T75.26/109 |
| T 1039 N | 1800 … 2200 | 2200 | 1711 | 18,5 | 1,53/2 | 1039 | 0,90 | 0,300 | 200 | 300 | F = 1000 | 0,0231 | 125 | T75.26/109 |
| T 1218 N | 2000 … 2800 | 2625 | 2531 | 22,5 | 1,52/1,0 | 1220 | 1,05 | 0,33 | 150 | 350 | F = 1000 | 0,016 | 125 | T75.14/109 |
| T 1219 N | 2000 … 2800 | 2625 | 2531 | 22,5 | 1,38/1,0 | 1220 | 1,000 | 0,275 | 150 | 350 | F = 1000 | 0,0184 | 125 | T75.26/109 |
| T 1329 N | 1800 … 2200 | 2600 | 2645 | 23,0 | 1,13/1,0 | 1329 | 0,900 | 0,234 | 200 | 300 | F = 1000 | 0,0184 | 125 | T75.26/109 |
| T 1589 N | 2000 … 2800* | 3200 | 3920 | 28,0 | 2,45/5,0 | 1589 | 1,100 | 0,237 | 150 | 400 | C = 500 | 0,0124 | 125 | T100.26/110 |
| T 1866 N | 1800 … 2200 | 4100 | 6125 | 35,0 | 2,2/8,0 | 1869 | 0,900 | 0,155 | 200 | 300 | F = 1000 | 0,0133 | 125 | T100.35/110 |
| T 1869 N | 1800 … 2200 | 4100 | 6125 | 35,0 | 2,2/8,0 | 1869 | 0,900 | 0,155 | 200 | 300 | F = 1000 | 0,0133 | 125 | T100.26/110 |
| T 2101 N | 2000 … 2600 | 5050 | 10100 | 45,0 | 1,2/2,0 | 2340 | 0,820 | 0,162 | 150 | 250 | F = 1000 | 0,0097 | 125 | T120.35K/111 |
| T 2156 N | 2000 … 2800 | 4600 | 8000 | 40,0 [1] | 2,65/8,8 | 2159 | 1,050 | 0,154 | 150 | 400 | C = 500 | 0,0099 | 125 | T110.35/110 |
| T 2159 N | 2000 … 2800 | 4600 | 8000 | 40,0 [1] | 2,65/8,8 | 2159 | 1,050 | 0,154 | 150 | 400 | F = 1000 | 0,0099 | 125 | T110.26/140 |
| T 2160 N | 2200 … 2800 | 4600 | 8000 | 40,0 | 2,65/8,8 | 2159 | 1,050 | 0,154 | 150 | | F = 1000 | 0,0099 | 125 | T120.26K/111 |
| | | | | | | | | | | | C = 500 | | | |
| T 2476 N | 2200 … 2800 | 5100 | 9460 | 43,5 [1] | 1,43/3,0 | 2480 | 0,950 | 0,154 | 200 | 400 | F = 1000 | 0,0085 | 125 | T110.35/110 |
| T 2479 N | 2200 … 2800 | 5100 | 9460 | 43,5 [1] | 1,43/3,0 | 2480 | 0,950 | 0,154 | 200 | 400 | F = 1000 | 0,0085 | 125 | T110.26/110 |
| T 2480 N | 2200 … 2800 | 5100 | 9460 | 43,5 | 1,43/3,0 | 2480 | 0,950 | 0,154 | 200 | 400 | F = 1000 | 0,0085 | 125 | T120.26K/111 |
| T 2709 N | 1600 … 2200 | 5800 | 12500 | 50,0 [1] | 2,35/11 | 2709 | 0,900 | 0,125 | 200 | 300 | F = 1000 | 0,0085 | 125 | T110.26/110 |
| T 2710 N | 1600 … 2200 | 5800 | 12500 | 50,0 | 2,35/11 | 2709 | 0,900 | 0,125 | 200 | 300 | F = 1000 | 0,0085 | 125 | T120.26K/111 |
| T 4301 N | 2200 … 2900 | 9420 | 41400 | 91,0 | 1,20/4 | 4300 | 0,770 | 0,107 | 300 | 250 | F = 1000 | 0,0054 | 125 | T150.35K/111 |
| T 4771 N | 2200 … 2900 | 10110 | 41400 | 91,0 | 1,20/4 | 4640 | 0,770 | 0,107 | 300 | 250 | F = 1000 | 0,0048 | 125 | T150.26K/111 |

■ Not for new design  * Highest voltage on request  [1] Case non-rupture current 38 kA (sinusoidal half wave 50 Hz)

радиодетали электронные компоненты со склада и под заказ

# Phase Control Thyristors

## up to 4500 V

| Type | $V_{DRM}$ $V_{RRM}$ V $V_{DSM} = V_{DRM}$ $V_{RSM} = V_{RRM}$ + 100 V | $I_{TRMSM}$ A | $\int i^2dt$ $A^2s \cdot 10^3$ 10 ms $T_{vj\,max}$ | $I_{TSM}$ kA 10 ms $T_{vj\,max}$ | $V_T/I_T$ V/kA $T_{vj\,max}$ | $I_{TAVM}$ A 180 ° el sin $T_c = 85$ °C | $V_{(TO)}$ V $T_{vj} = T_{vj\,max}$ | $r_T$ mΩ $T_{vj} = T_{vj\,max}$ | $(di/dt)_{cr}$ A/µs DIN IEC 747 - 6 | $t_q$ µs typ. | $(dv/dt)_{cr}$ V/µs DIN IEC 747 - 6 | $R_{thJC}$ °C/W 180 ° el sin | $T_{vj\,max}$ °C | Outline / page |
|---|---|---|---|---|---|---|---|---|---|---|---|---|---|---|
| T 379 N | 3600 … 4200 | 800 | 205 | 6,4 | 3,26/1,2 | 422 | 1,20 | 1,600 | 100 | 500 | F = 1000 | 0,033 | 125 | T57.26/109 |
| T 380 N | 3200 … 3800 | 750 | 211 | 6,5 | 2,8/1,2 | 380 | 1,20 | 1,200 | 100 | 350 | F = 1000 | 0,045 | 125 | T57.26K/110 |
| T 729 N | 3600 … 4200 | 1840 | 1250 | 15,8 | 3,4/3,5 | 730 | 1,20 | 0,570 | 80 | 400 | F = 1000 | 0,0215 | 120 | T75.26/109 |
| T 730 N | 3600 … 4200 | 1840 | 1250 | 15,8 | 3,4/3,5 | 730 | 1,20 | 0,570 | 80 | 400 | F = 1000 | 0,0215 | 120 | T75.26K/110 |
| T 731 N | 3600 … 4400 | 2010 | 1280 | 16,0 | 1,86/1,2 | 910 | 1,08 | 0,650 | 300 | 500 | H = 2000 | 0,0185 | 125 | T76.26K/110 |
| T 869 N | 3000 … 3600 | 2000 | 1445 | 17,0 | 3,18/3,8 | 860 | 1,08 | 0,500 | 80 | 400 | F = 1000 | 0,0210 | 125 | T75.26/109 |
| T 901 N | 2800 … 3600 | 2050 | 1445 | 17,0 | 1,75/1,2 | 950 | 1,16 | 0,494 | 300 | 300 | F = 1000 | 0,0185 | 125 | T76.26K/110 |
| T 929 N | 3000 … 3600 | 2200 | 1530 | 17,5 | 2,7/3,6 | 930 | 1,00 | 0,430 | 80 | 500 | F = 1000 | 0,0215 | 125 | T75.26/109 |
| T 1401 N | 3600 … 4400 | 3450 | 6480 | 36,0 | 1,95/2,0 | 1600 | 1,29 | 0,330 | 300 | 350 | H = 2000 | 0,0097 | 125 | T120.35K/111 |
| T 1971 N | 3600 … 4400 | 3700 | 6480 | 36,0 | 1,95/2,0 | 1730 | 1,29 | 0,330 | 300 | 350 | H = 2000 | 0,0086 | 125 | T120.26K/111 |
| | | | | | | | | | | | F = 1000 | | | |
| T 1601 N | 2800 … 3600 | 4160 | 8400 | 41,0 | 1,5/2,0 | 1920 | 1,00 | 0,250 | 300 | 300 | F = 1000 | 0,0097 | 125 | T120.35K/111 |
| T 1929 N | 3000 … 3800 | 4200 | 6850 | 37,0 | 2,9/8,0 | 1930 | 1,08 | 0,200 | 150 | 450 | F = 1000 | 0,0099 | 125 | T110.26/110 |
| T 2001 N | 2800 … 3600 | 4460 | 8400 | 41,0 | 1,5/2,0 | 2060 | 1,00 | 0,250 | 300 | 300 | F = 1000 | 0,0087 | 125 | T120.26K/111 |
| T 3401 N | 3100 … 3600 | 8350 | 37850 | 87,0 | 1,4/4 | 3800 | 0,82 | 0,145 | 300 | 300 | F = 1000 | 0,0054 | 125 | T150.35K/111 |
| T3801 N | 3100 … 3600 | 8950 | 37850 | 87,0 | 1,4/4 | 4100 | 0,82 | 0,145 | 300 | 300 | F = 1000 | 0,0048 | 125 | T150.26K/111 |
| T 3101 N | 4000 … 4400 | 6830 | 34000 | 83,0 | 1,75/4 | 3160 | 1,01 | 0,185 | 300 | 400 | H = 2000 | 0,0054 | 125 | T150.35K/111 |



радиодетали электронные компоненты со склада и под заказ

г.Минск тел.8(017)2005646 www.fotorele.net модули EUPEC IGBT Infineon minsk17@tut.by



# Phase Control Thyristors

## up to 5500 V

| Type | $V_{DRM}$ $V_{RRM}$ V $V_{DSM} = V_{DRM}$ $V_{RSM} = V_{RRM}$ + 100 V | $I_{TRMSM}$ A | $\int i^2dt$ $A^2s \cdot 10^3$ 10 ms $T_{vj\,max}$ | $I_{TSM}$ kA 10 ms $T_{vj\,max}$ | $V_T/I_T$ V/kA $T_{vj\,max}$ | $I_{TAVM}$ A 180 ° el sin $T_c = 85$ °C | $V_{(TO)}$ V $T_{vj} = T_{vj\,max}$ | $r_T$ mΩ $T_{vj} = T_{vj\,max}$ | $(di/dt)_{cr}$ A/µs DIN IEC 747 - 6 | $t_q$ µs typ. | $(dv/dt)_{cr}$ V/µs DIN IEC 747 - 6 | $R_{thJC}$ °C/W 180 ° el sin | $T_{vj\,max}$ °C | Outline / page |
|---|---|---|---|---|---|---|---|---|---|---|---|---|---|---|
| T 1451 N | 4800 … 5200 | 3610 | 9250 | 43,0 | 1,70/2,0 | 1690 | 0,92 | 0,370 | 300 | 450 | H = 2000 | 0,0097 | 125 | T120.35K/111 |
| T 1551 N | 4800 … 5200 | 3920 | 9250 | 43,0 | 1,70/2,0 | 1830 | 0,92 | 0,370 | 300 | 450 | H = 2000 | 0,0086 | 125 | T120.26K/111 |
| T 2161 N | 4800 … 5200 | 4630 | 14600 | 54,0 | 1,85/3,0 | 2170 | 0,81 | 0,360 | 300 | 450 | H = 2000 | 0,0075 | 125 | T120.35K/111 |
| T 2351 N | 4800 … 5200 | 5000 | 14600 | 54,0 | 1,85/3,0 | 2360 | 0,81 | 0,360 | 300 | 450 | H = 2000 | 0,0065 | 125 | T120.26K/111 |
| T 2401 N | 4800 … 5200 | 5970 | 22000 | 67,0 | 2,10/4,0 | 2750 | 1,09 | 0,250 | 300 | ≤ 350 | H = 2000 | 0,0054 | 125 | T150.35K/111 |
| T 2851 N | 4800 … 5200 | 6230 | 31000 | 79,0 | 1,70/4,0 | 3000 | 0,765 | 0,235 | 300 | 600 | H = 2000 | 0,0054 | 125 | T150.35K/111 |
| T 3441N | 4800 … 5200 | 6600 | 31000 | 79,0 | 1,70/4,0 | 3200 | 0,765 | 0,235 | 300 | 600 | H = 2000 | 0,0048 | 125 | T150.26K/111 |
| T 4021 N | 4800 … 5350 | 8480 | 50000 | 100,0 | 1,80/6,0 | 3920 | 0,92 | 0,142 | 300 | 550 | H = 2000 | 0,00445 | 125 | T172.35K/112 |

## up to 10 000 V

| Type | $V_{DRM}$ $V_{RRM}$ V $V_{DSM} = V_{DRM}$ $V_{RSM} = V_{RRM}$ + 100 V | $I_{TRMSM}$ A | $\int i^2dt$ $A^2s \cdot 10^3$ 10 ms $T_{vj\,max}$ | $I_{TSM}$ kA 10 ms $T_{vj\,max}$ | $V_T/I_T$ V/kA $T_{vj\,max}$ | $I_{TAVM}$ A 180 ° el sin $T_c = 85$ °C | $V_{(TO)}$ V $T_{vj} = T_{vj\,max}$ | $r_T$ mΩ $T_{vj} = T_{vj\,max}$ | $(di/dt)_{cr}$ A/µs DIN IEC 747 - 6 | $t_q$ µs typ. | $(dv/dt)_{cr}$ V/µs DIN IEC 747 - 6 | $R_{thJC}$ °C/W 180 ° el sin | $T_{vj\,max}$ °C | Outline / page |
|---|---|---|---|---|---|---|---|---|---|---|---|---|---|---|
| T 201 N | 6000 … 7000 | 510 | 88,2 | 4,2 | 3,40/0,5 | 245 | 1,29 | 4,180 | 300 | 600 | H = 2000 | 0,0430 | 125 | T58.26K/110 |
| ◆ T 281 | 6000 … 6500 | 600 | 115 | 4,8 | 2,75/0,5 | 280 | 1,35 | 2,8 | 150 | 1000 | F = 1000 | 0,0430 | 125 | T58.26K/ 110 |
| T 501 N | 6000 … 7000 | 1260 | 845 | 13,0 | 2,65/1,0 | 640 | 1,30 | 1,350 | 300 | 600 | H = 2000 | 0,0185 | 125 | T76.26K/110 |
| T 551 N | 6000 … 7000 | 1260 | 845 | 13,0 | 2,65/1,0 | 600 | 1,30 | 1,350 | 300 | 600 | H = 2000 | 0,0205 | 125 | T76.35K/111 |
| ◆ T 571 | 6000 … 6500 | 1150 | 442 | 9,4 | 2,75/1,0 | 540 | 1,35 | 1,4 | 150 | 1000 | F = 1000 | 0,0230 | 125 | T76.26K/110 |
| T 1081 N | 6000 … 7000 | 2830 | 5780 | 34,0 | 2,7/2,0 | 1330 | 1,18 | 0,759 | 300 | 600 | H = 2000 | 0,0086 | 125 | T120.26K/111 |
| T 1201 N | 6000 … 7000 | 2600 | 5780 | 34,0 | 2,7/2,0 | 1230 | 1,18 | 0,759 | 300 | 600 | H = 2000 | 0,0097 | 125 | T120.35K/111 |
| T 1651N | 6000 … 7000 | 3610 | 11500 | 48,0 | 2,65/3 | 1685 | 1,22 | 0,490 | 300 | 600 | H = 2000 | 0,0075 | 125 | T120.35K/111 |
| T 1851 N | 6000 … 7000 | 3940 | 11500 | 48,0 | 2,65/3 | 1850 | 1,22 | 0,490 | 300 | 600 | H = 2000 | 0,0065 | 125 | T120.26K/111 |
| T 1901 N | 7000 … 8000 | 4520 | 21100 | 65,0 | 3,0/4,0 | 2130 | 1,24 | 0,440 | 300 | 550 | H = 2000 | 0,0054 | 125 | T150.35K/111 |
| T 2251N | 7000 … 8000 | 4840 | 21100 | 65,0 | 3,0/4,0 | 2280 | 1,24 | 0,440 | 300 | 550 | H = 2000 | 0,0048 | 125 | T150.26K/111 |
| T 2871 N | 7500 … 8000 | 6060 | 40500 | 90,0 | 2,95/6,0 | 2740 | 1,425 | 0,310 | 300 | 550 | H = 2000 | 0,00445 | 125 | T172.35K/112 |

◆ New type

радиодетали электронные компоненты со склада и под заказ

# Phase Control Thyristors

## Light Triggered Thyristors

| Type | $V_{BO}$ V | $V_{RRM}$ V | $I_{TRMSM}$ A | $\int i^2dt$ $A^2s \cdot 10^3$ 10 ms $T_{vj\,max}$ | $I_{TSM}$ kA 10 ms $T_{vj\,max}$ | $V_T/I_T$ V/kA $T_{vj\,max}$ | $I_{TAVM}$ A 180 ° el sin $T_c = 85$ °C | $V_{(TO)}$ V $T_{vj} = T_{vj\,max}$ | $r_T$ mΩ $T_{vj} = T_{vj\,max}$ | $(di/dt)_{cr}$ A/µs DIN IEC 747 - 6 | $t_q$ µs typ. | $(dv/dt)_{cr}$ V/µs DIN IEC 747 - 6 | $R_{thJC}$ °C/W 180 ° el sin | $T_{vj\,max}$ °C | Outline / page |
|---|---|---|---|---|---|---|---|---|---|---|---|---|---|---|---|
| T 553 N | 6500 | 7200 | 1200 | 684 | 11,7 | 2,65/1,0 | 550 | 1,30 | 1,35 | 300 | 600 | H = 2000 | 0,0200 | 120 | T76.35L/112 |
| T 1503 N | 7500 | 7700 … 8200 | 3900 | 15125 | 55,0 | 3,0/4,0 | 1770 | 1,24 | 0,44 | 300 | 550 | H = 2000 | 0,0063 | 120 | T150.40L/112 |
| T 2563 N | 7500 | 7700 … 8200 | 5600 | 40500 | 90,0 | 2,95/5,0 | 2520 | 1,28 | 0,278 | 300 | 550 | H = 2000 | 0,0048 | 120 | T172.40L/112 |
| T 4003 N | 5200 | 5400 | 5600 | 50000 | 100,0 | 1,8/5,0 | 3480 | 0,92 | 0,142 | 300 | 500 | H = 2000 | 0,0048 | 120 | T172.40L/112 |

# Fast Thyristors

## up to 600 V

| Type | $V_{DRM}$, $V_{RRM}$ $V_{DSM} = V_{DRM}$ $V_{RSM} = V_{RRM}$+50 V V | $I_{TRMSM}$ A | $I_{TSM}$ kA 10 ms, $T_{vj\,max}$ | $V_T/I_T$ V/kA $T_{vj\,max}$ | $V_{(TO)}$ V $T_{vj} = T_{vj\,max}$ | $r_T$ mΩ $T_{vj} = T_{vj\,max}$ | $(di/dt)_{cr}$ A/µs DIN IEC 747 - 6 | $t_q$ µs typ. | $(dv/dt)_{cr}$ V/µs DIN IEC 747 - 6 | $V_{GT}$ V $T_{vj} = 25$ °C | $I_{GT}$ mA $T_{vj} = 25$ °C | $R_{thJC}$ °C/W 180 ° el sin | $T_{vj\,max}$ °C | Outline / page |
|---|---|---|---|---|---|---|---|---|---|---|---|---|---|---|
| ■ T 72 F | 400 … 600 | 200 | 2,05 | 2,1/0,4 | 1,25 | 1,8 | 200 | S ≤ 18 | B = 50 | 2,0 | 150 | 0,350 | 125 | TSW27/108 |
| | | | | | | | D ≤ 15 | C = 500 | | | | | | |
| | | | | | | | | | L = 500 | | | | | |
| | | | | | | | | | M = 1000 | | | | | |
| ■ T 102 F | 200 … 600 | 220 | 2,75 | 1,95/0,5 | 1,20 | 1,4 | 200 | D ≤ 15 | B = 50 | 2,0 | 150 | 0,260 | 125 | TSW27/108 |
| | | | | | | | | | C = 500 | | | | | |
| | | | | | | | | | L = 500 | | | | | |
| | | | | | | | | | M = 1000 | | | | | |
| T 178 F | 200 … 600 | 300 | 1,90 | 1,85/0,5 | 1,02 | 1,55 | 300 | E ≤ 20 | B = 50 | 2,0 | 200 | 0,180 | 140 | T41.14/109 |
| | | | | | | | | D ≤ 15 | C = 500 | | | | | |
| T 308 F | 200 … 600 | 600 | 4,00 | 1,9/1,0 | 1 | 0,7 | 300 | E ≤ 20 | C = 500 | 2,0 | 200 | 0,108 | 140 | T41.14/109 |
| | | | | | | | | D ≤ 15 [1] | M = 1000 | | | | | |

■ Not for new design

[1] Only in connection with $(dv/dt)_{cr}$ = B or C



радиодетали электронные компоненты со склада и под заказ

г.Минск тел.8(017)2005646 www.fotorele.net модули EUPEC IGBT Infineon minsk17@tut.by



# Fast Thyristors

## up to 600 V

| Type | $V_{DRM}$, $V_{RRM}$ $V_{DSM} = V_{DRM}$ $V_{RSM} = V_{RRM}+50$ V V | $I_{TRMSM}$ A | $I_{TSM}$ kA 10 ms, $T_{vj\,max}$ | $V_T/I_T$ V/kA $T_{vj\,max}$ | $V_{(TO)}$ V $T_{vj} = T_{vj\,max}$ | $r_T$ mΩ $T_{vj} = T_{vj\,max}$ | $(di/dt)_{cr}$ A/µs DIN IEC 747 - 6 | $t_q$ µs typ. | $(dv/dt)_{cr}$ V/µs DIN IEC 747 - 6 | $V_{GT}$ V $T_{vj} = 25$ °C | $I_{GT}$ mA $T_{vj} = 25$ °C | $R_{thJC}$ °C/W 180 ° el sin | $T_{vj\,max}$ °C | Outline / page |
|---|---|---|---|---|---|---|---|---|---|---|---|---|---|---|
| T 698 F | 200 … 600 | 1100 | 11,00 | 1,65/2,0 | 1,02 | 0,32 | 300 | E ≤ 20 | C = 500 | 2,0 | 200 | 0,0500 | 140 | T50.14/109 |
| | | | | | | | | D ≤ 15 | M = 1000 | | | | | |
| T 1078 F | 200 … 400 | 2000 | 14,50 | 1,81/3,5 | 1,02 | 0,2 | 200 | S ≤ 18 | C = 500 | 2,0 | 250 | 0,0330 | 140 | T50.14/109 |
| | | | | | | | | D ≤ 15 | M = 1000 | | | | | |

## up to 1400 V

| Type | $V_{DRM}$, $V_{RRM}$ $V_{DSM} = V_{DRM}$ $V_{RSM} = V_{RRM}+50$ V V | $I_{TRMSM}$ A | $I_{TSM}$ kA 10 ms, $T_{vj\,max}$ | $V_T/I_T$ V/kA $T_{vj\,max}$ | $V_{(TO)}$ V $T_{vj} = T_{vj\,max}$ | $r_T$ mΩ $T_{vj} = T_{vj\,max}$ | $(di/dt)_{cr}$ A/µs DIN IEC 747 - 6 | $t_q$ µs typ. | $(dv/dt)_{cr}$ V/µs DIN IEC 747 - 6 | $V_{GT}$ V $T_{vj} = 25$ °C | $I_{GT}$ mA $T_{vj} = 25$ °C | $R_{thJC}$ °C/W 180 ° el sin | $T_{vj\,max}$ °C | Outline / page |
|---|---|---|---|---|---|---|---|---|---|---|---|---|---|---|
| ■ T 80 F | 1200 … 1300* | 200 | 2,45 | 2,4/0,4 | 1,30 | 2,40 | 160 | F ≤ 25 | B = 50 | 2,0 | 150 | 0,280 | 125 | TSW27/108 |
| | | | | | | | | E ≤ 20 | C = 500 | | | | | |
| | | | | | | | | S ≤ 18 | L = 500 | | | | | |
| | | | | | | | | | M = 1000 | | | | | |
| ■ T 120 F | 1200 … 1300* | 240 | 2,90 | 2,2/0,5 | 1,20 | 1,60 | 160 | F ≤ 25 | B = 50 | 2,0 | 150 | 0,200 | 125 | TSW27/108 |
| | | | | | | | | E ≤ 20 | C = 500 | | | | | |
| | | | | | | | | S ≤ 18 [1)] | L = 500 | | | | | |
| | | | | | | | | | M = 1000 | | | | | |
| T 128 F | 1200 … 1300* | 300 | 2,45 | 2,6/0,6 | 1,28 | 2,15 | 160 | F ≤ 25 | B = 50 | 2,0 | 150 | 0,163 | 125 | T41.14/109 |
| | | | | | | | | E ≤ 20 | C = 500 | | | | | |
| | | | | | | | | S ≤ 18 [1)] | L = 500 | | | | | |
| | | | | | | | | | M = 1000 | | | | | |
| T 188 F | 1000 … 1300* | 400 | 2,90 | 2,44/0,8 | 1,20 | 1,35 | 160 | F ≤ 25 | B = 50 | 2,0 | 150 | 0,117 | 125 | T41.14/109 |
| | | | | | | | | E ≤ 20 | C = 500 | | | | | |
| | | | | | | | | S ≤ 18 [1)] | L = 500 | | | | | |
| | | | | | | | | | M = 1000 | | | | | |

■ Not for new design

* Highest voltage on request

[1)] Only in connection with $(dv/dt)_{cr}$ = B or C

радиодетали электронные компоненты со склада и под заказ

# Fast Thyristors

## up to 1400 V

| Type | $V_{DRM}$, $V_{RRM}$ $V_{DSM} = V_{DRM}$ $V_{RSM} = V_{RRM}+50$ V V | $I_{TRMSM}$ A | $I_{TSM}$ kA 10 ms, $T_{vj\,max}$ | $V_T/I_T$ V/kA $T_{vj\,max}$ | $V_{(TO)}$ V $T_{vj} = T_{vj\,max}$ | $r_T$ mΩ $T_{vj} = T_{vj\,max}$ | $(di/dt)_{cr}$ A/µs DIN IEC 747 - 6 | $t_q$ µs typ. | $(dv/dt)_{cr}$ V/µs DIN IEC 747 - 6 | $V_{GT}$ V $T_{vj} = 25$ °C | $I_{GT}$ mA $T_{vj} = 25$ °C | $R_{thJC}$ °C/W 180 ° el sin | $T_{vj\,max}$ °C | Outline / page |
|---|---|---|---|---|---|---|---|---|---|---|---|---|---|---|
| ■ T 290 F | 1000 … 1300 | 550 | 6,40 | 2,1/1,0 | 1,20 | 0,75 | 200 | F ≤ 25 | C = 500 | 2,2 | 250 | 0,080 | 125 | TFL54/108 |
| | | | | | | | | E ≤ 20 | M = 1000 | | | | | |
| | | | | | | | | S ≤ 18 [1] | | | | | | |
| T 318 F | 1000 … 1200* | 700 | 6,00 | 2,25/1,2 | 1,30 | 0,70 | 200 | F ≤ 25 | B = 50 | 2,2 | 250 | 0,068 | 125 | T50.14/109 |
| | | | | | | | | E ≤ 20 | C = 500 | | | | | |
| | | | | | | | | S ≤ 18 [1] | L = 500 | | | | | |
| | | | | | | | | | M = 1000 | | | | | |
| ■ T 320 F | 1000 … 1300* | 600 | 9,15 | 1,95/1,2 | 1,15 | 0,42 | 200 | F ≤ 25 | B = 50 | 2,2 | 250 | 0,085 | 125 | TSW41/108 |
| | | | | | | | | G ≤ 30 | C = 500 | | | | | |
| | | | | | | | | | L = 500 | | | | | |
| | | | | | | | | | M = 1000 | | | | | |
| T 340 F | 1000 … 1400 | 600 | 6,40 | 1,65/1,0 | 0,90 | 0,70 | 200 | N ≤ 60 | C = 500 | 2,2 | 250 | 0,080 | 125 | TFL54/108 |
| | | | | | | | | | L = 500 | | | | | |
| | | | | | | | | | M = 1000 | | | | | |
| T 408 F | 1000 … 1200* | 750 | 6,40 | 2,20/1,4 | 1,20 | 0,63 | 200 | F ≤ 25 | C = 500 | 2,2 | 250 | 0,0530 | 125 | T50.14/109 |
| | | | | | | | | E ≤ 20 | L = 500 | | | | | |
| | | | | | | | | S ≤ 18 [1] | M = 1000 | | | | | |
| ■ T 599 F | 1200 … 1300* | 1500 | 10,00 | 1,66/1,0 | 1,15 | 0,42 | 200 | G ≤ 30 | B = 50 | 2,2 | 250 | 0,0380 | 125 | T57.26/109 |
| | | | | | | | | F ≤ 25 | C = 500 | | | | | |
| ■ T 600 F | 1200 … 1300* | 1500 | 10,00 | 1,66/1,0 | 1,15 | 0,42 | 200 | E ≤ 20 [1] | L = 500 | 2,2 | 250 | 0,0380 | 125 | T57.26K/110 |
| | | | | | | | | | M = 1000 | | | | | |
| ■ T 1052 S | 1000 … 1200 | 2200 | 20,00 | 2,70/4,0 | 1,45 | 0,3 | 400 | F ≤ 25 | B = 50 | 2,2 | 300 | 0,0180 | 125 | T75.26K/110 |
| | | | | | | | | E ≤ 20 | C = 500 | | | | | |
| | | | | | | | | D ≤ 15 | L = 500 | | | | | |
| | | | | | | | | | M = 1000 | | | | | |

■ Not for new design

[1] Only in connection with $(dv/dt)_{cr}$ = B or C

* Highest voltage on request



радиодетали электронные компоненты со склада и под заказ

г.Минск тел.8(017)2005646 www.fotorele.net модули EUPEC IGBT Infineon minsk17@tut.by



# Fast Thyristors

## up to 2000 V

| Type | $V_{DRM}$, $V_{RRM}$ $V_{DSM} = V_{DRM}$ $V_{RSM} = V_{RRM}+50$ V V | $I_{TRMSM}$ A | $I_{TSM}$ kA 10 ms, $T_{vj\,max}$ | $V_T/I_T$ V/kA $T_{vj\,max}$ | $V_{(TO)}$ V $T_{vj} = T_{vj\,max}$ | $r_T$ mΩ $T_{vj} = T_{vj\,max}$ | $(di/dt)_{cr}$ A/µs DIN IEC 747 - 6 | $t_q$ µs typ. | $(dv/dt)_{cr}$ V/µs DIN IEC 747 - 6 | $V_{GT}$ V $T_{vj} = 25$ °C | $I_{GT}$ mA $T_{vj} = 25$ °C | $R_{thJC}$ °C/W 180 ° el sin | $T_{vj\,max}$ °C | Outline / page |
|---|---|---|---|---|---|---|---|---|---|---|---|---|---|---|
| T 930 S | 1600 … 2000* | 2000 | 18,00 | 2,70/3,5 | 1,35 | 0,33 | 250 | N ≤ 60 | B = 50 | 2,2 | 250 | 0,0210 | 125 | T75.26K/110 |
| | | | | | | | | M ≤ 50 | C = 500 | | | | | |
| | | | | | | | | L ≤ 45 | L = 500 | | | | | |
| | | | | | | | | K ≤ 40 [1)] | M = 1000 | | | | | |

* Highest voltage on request
[1)] Only in connection with $(dv/dt)_{cr}$ = B or C

# Fast Asymmetric Thyristors

| Type | $V_{DRM}$ V $V_{DSM} = V_{DRM}$ | $V_{RRM}$ V ($V_{RRM(C)}$) tp = 1 µs | $I_{TRMSM}$ A | $I_{TSM}$ kA 10 ms $T_{vj\,max}$ | $V_T/I_T$ V/kA $T_{vj\,max}$ | $V_{(TO)}/r_T$ V/mΩ $T_{vj} = T_{vj\,max}$ | $(di/dt)_{cr}$ A/µs DIN IEC 747 - 6 | $t_q$ µs typ. | $(dv/dt)_{cr}$ V/µs DIN IEC 747 - 6 | $V_{GT}$ V $T_{vj} = 25$ °C | $I_{GT}$ mA $T_{vj} = 25$ °C | $R_{thJC}$ °C/W 180 ° el sin | $T_{vj\,max}$ °C | Outline / page |
|---|---|---|---|---|---|---|---|---|---|---|---|---|---|---|
| A 158 S | 1000 … 1300* | 15 (50) | 400 | 2,45 | 2,60/0,6 | 1,3/2 | 400 | D ≤ 15 | C = 500 | 2,7 | 300 | 0,117 | 125 | T41.14/109 |
| | | | | | | | | C ≤ 12 | F = 1000 | | | | | |
| | | | | | | | | B ≤ 10 | | | | | | |
| | | | | | | | | A ≤ 8 [1)] | | | | | | |
| A 198 S | 1000 … 1300* | 15 (50) | 400 | 2,70 | 2,0/0,25 | 1,1/1,3 | 400 | E ≤ 20 | C = 500 | 2,7 | 300 | 0,117 | 125 | T41.14/109 |
| | | | | | | | | D ≤ 15 | F = 1000 | | | | | |
| A 358 S | 1000 … 1300* | 15 (50) | 800 | 5,00 | 2,75/1,5 | 1,3/0,9 | 500 | D ≤ 15 | C = 500 | 2,7 | 300 | 0,053 | 125 | T50.14/109 |
| | | | | | | | | C ≤ 12 | F = 1000 | | | | | |
| | | | | | | | | B ≤ 10 | | | | | | |
| | | | | | | | | A ≤ 8 [1)] | | | | | | |
| A 438 S | 1000 … 1300* | 15 (50) | 900 | 5,50 | 2,1/1,5 | 1,1/0,6 | 500 | F ≤ 25 | C = 500 | 2,7 | 300 | 0,053 | 125 | T50.14/109 |
| | | | | | | | | E ≤ 20 | F = 1000 | | | | | |
| | | | | | | | | D ≤ 15 | | | | | | |

* Highest voltage on request
[1)] $V_{DRM} \leq 1000$ V

радиодетали электронные компоненты со склада и под заказ

# Overview Rectifier in Disc Housings

$V_{RRM}$ – Concept

| | | | | | | | | | | |
|---|---|---|---|---|---|---|---|---|---|---|
| 9000 V | | | | | D471N | | | | D2601NH<br>D2601N | |
| 6800 V | | | | | D711N | | D1481N | | D3001N | |
| 5800 V | | | | | | | | | D3041N | |
| 5000 V | | | | | | | | | | D6001N |
| 4800 V | 1500 $V_{RMS}$ | | | | D749N | | D1800N | | | |
| 4600 V | | | | | | | D1809N | | | |
| 4500 V | | | | | | | | | | |
| 4400 V | | | | | | D1069N | | | D3501N | |
| 4000 V | | | | | D849N | | | | | |
| 3600 V | 1100 $V_{RMS}$ | | | | D269N | | | High Power-Discs | | |
| 3400 V | | | | | | | | | | |
| 3200 V | | | | | | | | | | |
| 2800 V | | | | D748N | | | D2209N D2200N | | D4709N | |
| 2600 V | | | | | D1029N | | | | | |
| 2400 V | | | | | | D1709N | D2659N D2650N | | | |
| 2200 V | 690 $V_{RMS}$ | | D660N | | | | | | D4201N | |
| 2000 V | | D428N | | | | | | | | |
| 1800 V | 550 $V_{RMS}$ | | | D798N | D1049N | | | | | |
| 1600 V | | Epoxy-Discs | | | | | | | | |
| 1400 V | 400 $V_{RMS}$ | | | | | | | | | |
| 1200 V | | | | | | | | | | |
| 600 V | D448N | D758N | | | D2228N | D4457N | D5807N / D5809N | D8019N | | |
| 400 V | | | | | | | | | | |
| Pellet ∅ | 17 mm | 21 mm | 30 mm | 30 mm | 38 mm | 46 mm | 56 mm | 65 mm | 75/80 mm | 101 mm |
| Case ∅ | 41 mm | | | 50 mm | 57/60 mm | 75 mm | | 100 mm | 120 mm | 150 mm |

г.Минск тел.8(017)2005646 www.fotorele.net модули EUPEC IGBT Infineon minsk17@tut.by



# Rectifier Diodes

## up to 800 V

| Type | $V_{RRM}$ V $V_{RSM} = V_{RRM} + 50$ V | $I_{FRMSM}$ A | $I_{FSM}$ kA 10 ms, $T_{vj\,max}$ | $\int i^2dt$ $A^2s \cdot 10^3$ 10 ms $T_{vj\,max}$ | $I_{FAVM}/T_c$ A/°C 180° sinus | $V_{(TO)}$ V $T_{vj} = T_{vj\,max}$ | $r_T$ mΩ $T_{vj} = T_{vj\,max}$ | $R_{thJC}$ °C/W 180 ° el sin | $T_{vj\,max}$ °C | Outline / page |
|---|---|---|---|---|---|---|---|---|---|---|
| D 255 N | 200 … 800* | 400 | 4,6 | 105,8 | 255/110 | 0,65 | 0,850 | 0,2300 | 180 | DSW27/113 |
| ■ D 255 K | 200 … 800* | 400 | 4,0 | 80,0 | 255/75 | 0,65 | 0,850 | 0,3450 | 180 | DSW27/113 |
| D 448 N | 200 … 800* | 710 | 5,1 | 130,0 | 450/122 | 0,70 | 0,510 | 0,1020 | 180 | D41.14/114 |
| D 758 N | 400 … 800* | 1195 | 8,8 | 387,2 | 760/115 | 0,70 | 0,310 | 0,0670 | 180 | D41.14/114 |
| D 2228 N | 200 … 600 | 4000 | 28,5 | 4061,0 | 2230/110 | 0,70 | 0,0975 | 0,0254 | 180 | D60.14/114 |
| D 2898 N | 400 … 600 | 6100 | 32,3 | 5200,0 | 2894/100 | 0,66 | 0,060 | 0,0254 | 180 | D60.14/114 |
| D 4457 N | 400 … 600 | 7000 | 52,0 | 13500,0 | 4460/111 | 0,70 | 0,047 | 0,0128 | 180 | D60.8/114 |
| D 5807 N | 400 … 600 | 9100 | 70,0 | 24500,0 | 5800/108 | 0,70 | 0,040 | 0,0098 | 180 | D73.8/114 |
| D 5809 N | 400 … 600 | 9100 | 70,0 | 24500,0 | 5800/58 | 0,70 | 0,040 | 0,0166 | 180 | D75.26/114 |
| D 6247 N | 400 … 600 | 9800 | 52,0 | 13500,0 | 6242/68 | 0,66 | 0,047 | 0,0130 | 180 | D60.8/ 114 |
| D 8019 N | 200 … 600 | 13300 | 95,0 | 45000,0 | 8020/56 | 0,70 | 0,027 | 0,0125 | 180 | D100.26/115 |
| D 8407 N | 400 … 600 | 13200 | 70,0 | 24500,0 | 8408/64 | 0,66 | 0,036 | 0,0098 | 180 | D73.8/ 114 |

## up to 1800 V

| Type | $V_{RRM}$ V $V_{RSM} = V_{RRM} + 100$ V | $I_{FRMSM}$ A | $I_{FSM}$ kA 10 ms, $T_{vj\,max}$ | $\int i^2dt$ $A^2s \cdot 10^3$ 10 ms $T_{vj\,max}$ | $I_{FAVM}/T_c$ A/°C 180° sinus | $V_{(TO)}$ V $T_{vj} = T_{vj\,max}$ | $r_T$ mΩ $T_{vj} = T_{vj\,max}$ | $R_{thJC}$ °C/W 180 ° el sin | $T_{vj\,max}$ °C | Outline / page |
|---|---|---|---|---|---|---|---|---|---|---|
| D 452 N | 1200 … 1800 | 710 | 10,8 | 583,2 | 450/130 | 0,77 | 0,48 | 0,0855 | 180 | DFL54/113 |
| D 452 K | 1200 … 1800 | 710 | 10,8 | 583,2 | 450/130 | 0,77 | 0,48 | 0,0855 | 180 | DFL54/113 |
| D 798 N | 1200 … 1800* | 1650 | 11,8 | 696,0 | 800/130 | 0,81 | 0,28 | 0,046 | 180 | D50.14/114 |
| D 1049 N | 1200 … 1800 | 2590 | 18,5 | 1710,0 | 1050/130 | 0,81 | 0,17 | 0,038 | 180 | D57.26/114 |

■ Not for new design

* Highest voltage on request

радиодетали электронные компоненты со склада и под заказ

# Rectifier Diodes

## up to 3000 V

| Type | $V_{RRM}$ V $V_{RSM} = V_{RRM} + 100$ V | $I_{FRMSM}$ A | $I_{FSM}$ kA 10 ms, $T_{vj\,max}$ | $\int i^2dt$ $A^2s \cdot 10^3$ 10 ms $T_{vj\,max}$ | $I_{FAVM}/T_c$ A/°C 180° sinus | $V_{(TO)}$ V $T_{vj} = T_{vj\,max}$ | $r_T$ mΩ $T_{vj} = T_{vj\,max}$ | $R_{thJC}$ °C/W 180 ° el sin | $T_{vj\,max}$ °C | Outline / page |
|---|---|---|---|---|---|---|---|---|---|---|
| D 121 N | 1200 … 2000 | 360 | 2,60 | 33,8 | 120/130 | 0,72 | 1,90 | 0,324 | 180 | DSW27/113 |
| D 121 K | 1200 … 2000 | 330 | 2,40 | 28,8 | 120/130 | 0,72 | 1,90 | 0,434 | 180 | DSW27/113 |
| D 251 N | 1200 … 2000 | 400 | 5,30 | 140,5 | 250/130 | 0,80 | 0,85 | 0,151 | 180 | DSW27/113 |
| | | | | | | | | | | DFL36/113 |
| D 251 K | 1200 … 2000 | 400 | 4,70 | 110,5 | 250/102 | 0,80 | 0,85 | 0,236 | 180 | DSW27/113 |
| | | | | | | | | | | DFL36/ 113 |
| D 400 N | 1600 … 2200 | 710 | 9,80 | 480,2 | 400/130 | 0,70 | 0,62 | 0,095 | 180 | DSW41/113 |
| ■ D 400 K | 1600 … 2200 | 710 | 9,80 | 480,2 | 400/130 | 0,70 | 0,62 | 0,095 | 180 | DSW41/113 |
| D 428 N | 1200 … 2000 | 840 | 6,00 | 180 | 430/139 | 0,81 | 0,54 | 0,069 | 180 | D41.14/114 |
| D 660 N | 1200 … 2200 | 1435 | 10,25 | 525 | 660/130 | 0,70 | 0,50 | 0,050 | 180 | D41.14K/115 |
| D 748 N | 2000 … 2800 | 1260 | 9,00 | 405 | 750/100 | 0,83 | 0,52 | 0,045 | 160 | D50.14/114 |
| D 1029 N | 1800 … 2600 | 2040 | 14,50 | 1051 | 1030/100 | 0,82 | 0,28 | 0,038 | 160 | D57.26/114 |
| D 1030 N | 1800 … 2600 | 2040 | 14,50 | 1051 | 1030/100 | 0,82 | 0,28 | 0,038 | 160 | D57.26K/115 |
| D 1709 N | 2000 … 2400 | 2700 | 18,00 | 1620 | 1700/90 | 0,83 | 0,20 | 0,0245 | 160 | D75.26/114 |
| D 2200 N | 2000 … 2800 | 4900 | 35,00 | 6125 | 2200/100 | 0,83 | 0,145 | 0,017 | 160 | D75.26K/115 |
| D 2209 N | 2000 … 2800 | 4900 | 35,00 | 6125 | 2200/100 | 0,83 | 0,145 | 0,017 | 160 | D75.26/114 |
| D 2650 N | 2000 … 2400 | 4710 | 33,50 | 5611 | 2650/100 | 0,82 | 0,148 | 0,0169 | 180 | D75.26K/115 |
| D 2659 N | 2000 … 2400 | 4710 | 33,50 | 5611 | 2650/100 | 0,82 | 0,148 | 0,0169 | 180 | D75.26/114 |
| D 4201 N | 1600 … 2200 | 11200 | 73,50 | 27000 | 4830/100 | 0,668 | 0,081 | 0,0092 | 160 | D120.35K/116 |
| D 4709 N | 2000 … 2800 | 8400 | 60,00 | 18000 | 4700/100 | 0,83 | 0,07 | 0,008 | 160 | D110.26/115 |

■ Not for new design

г.Минск тел.8(017)2005646 www.fotorele.net модули EUPEC IGBT Infineon minsk17@tut.by



# Rectifier Diodes

## up to 5000 V

| Type | $V_{RRM}$ V $V_{RSM} = V_{RRM} + 100$ V | $I_{FRMSM}$ A | $I_{FSM}$ kA 10 ms, $T_{vj\,max}$ | $\int i^2dt$ $A^2s \cdot 10^3$ 10 ms $T_{vj\,max}$ | $I_{FAVM}/T_c$ A/°C 180° sinus | $V_{(TO)}$ V $T_{vj} = T_{vj\,max}$ | $r_T$ mΩ $T_{vj} = T_{vj\,max}$ | $R_{thJC}$ °C/W 180 ° el sin | $T_{vj\,max}$ °C | Outline / page |
|---|---|---|---|---|---|---|---|---|---|---|
| ■ D 269 N | 3200 … 3600 | 550 | 4,0 | 80 | 270/100 | 0,86 | 1,540 | 0,098 | 150 | D57.26/114 |
| D 475 N | 3200 … 4000 | 745 | 10,9 | 594 | 475/100 | 0,765 | 0,612 | 0,085 | 160 | DSW41.1/113 |
| ■ D 475 K | 3200 … 4000 | 745 | 10,9 | 594 | 475/100 | 0,765 | 0,612 | 0,085 | 160 | DSW41.1/113 |
| D 749 N | 3600 … 4800* | 1540 | 11,0 | 605 | 750/100 | 0,85 | 0,650 | 0,039 | 160 | D57.26/114 |
| D 849 N | 2800 … 4000* | 1790 | 12,8 | 819 | 850/100 | 0,84 | 0,485 | 0,038 | 160 | D57.26/114 |
| D 850 N | 2800 … 4000* | 1790 | 12,8 | 819 | 850/100 | 0,84 | 0,485 | 0,038 | 160 | D57.26K/115 |
| ■ D 1069 N | 3600 … 4400 | 2200 | 15,5 | 1201 | 1070/100 | 0,85 | 0,460 | 0,027 | 160 | D75.26/114 |
| D 1809 N | 3200 … 4800 | 3850 | 27,5 | 3781 | 1800/100 | 0,85 | 0,253 | 0,0169 | 160 | D75.26/114 |
| D 1800 N | 3200 … 4800 | 3850 | 27,5 | 3781 | 1800/100 | 0,85 | 0,253 | 0,0169 | 160 | D75.26K/115 |
| D 3501 N | 3200 … 4200 | 8200 | 56 | 15680 | 3690/100 | 0,734 | 0,133 | 0,0092 | 160 | D120.35K/116 |
| ◆ D 6001 N | 4500 … 5000 | 13000 | 110 | 60500 | 6070/100 | 0,80 | 0,090 | 0,0046 | 160 | D150.26K/116 |

## up to 10000 V

| Type | $V_{RRM}$ V $V_{RSM} = V_{RRM} + 100$ V | $I_{FRMSM}$ A | $I_{FSM}$ kA 10 ms, $T_{vj\,max}$ | $\int i^2dt$ $A^2s \cdot 10^3$ 10 ms $T_{vj\,max}$ | $I_{FAVM}/T_c$ A/°C 180° sinus | $V_{(TO)}$ V $T_{vj} = T_{vj\,max}$ | $r_T$ mΩ $T_{vj} = T_{vj\,max}$ | $R_{thJC}$ °C/W 180 ° el sin | $T_{vj\,max}$ °C | Outline / page |
|---|---|---|---|---|---|---|---|---|---|---|
| D 711 N | 5800 … 6800 | 1670 | 10,5 | 550 | 790/100 | 0,840 | 0,870 | 0,0315 | 160 | D58.26K/115 |
| D 1481 N | 5800 … 6800 | 3610 | 24,5 | 3000 | 1650/100 | 0,750 | 0,420 | 0,0158 | 160 | D76.26K/116 |
| D 3001 N | 5800 … 6800 | 6340 | 53,0 | 14040 | 2900/100 | 0,840 | 0,216 | 0,0092 | 160 | D120.35K/116 |
| D 3041N | 5800 … 6800 | 6620 | 53,0 | 14040 | 2900/100 | 0,840 | 0,216 | 0,00855 | 160 | D120.26K/116 |
| D 471 N | 8000 … 9000 | 1200 | 10,0 | 500 | 565/100 | 1,040 | 1,780 | 0,0315 | 160 | D58.26K/115 |
| D 2601 N | 8500 … 9000 | 4820 | 50,0 | 12500 | 2240/100 | 0,944 | 0,412 | 0,00855 | 160 | D120.26K/116 |

■ Not for new design ◆ New type * Highest voltage on request

радиодетали электронные компоненты со склада и под заказ

# GCT – Freewheeling Diodes

| Type | $V_{(DRM)}$ V | $V_{(D)D}$ *) kV Tc = 25 typ. | $I_{(FSM)}$ kA sin, 10 ms $T_{vj\,max}$ | $\int i^2dt$ $A^2s \cdot 10^3$ sin, 10 ms $T_{vj\,max}$ | $V_{(F)}/I_{(FM)}$ V/2,5 kA $T_{vj} = T_{vj\,max}$ sin | $I_{(RM)}$ A di/dt = 1000 A/µs $I_{(FM)}$ = 2,5 kA $T_{vj} = T_{vj\,max}$ | $Q_{(rr)}$ mAs di/dt = 1000 A/µs $I_{(FM)}$ = 2,5 kA $T_{vj} = T_{vj\,max}$ | $R_{thJC}$ °C/W DC | $T_{vj\,max}$ °C | Outline / page |
|---|---|---|---|---|---|---|---|---|---|---|
| D 911 SH | 4500 | 2,8 | 17 | 1445 | 6,0 | 1200**) | 2,8**) | 0,0100 | 140 | D100.26K/116 |
| D 1031 SH | 4500 | 2,8 | 23 | 2645 | 4,2 | 1500**) | 3,5**) | 0,0100 | 140 | D100.26K/116 |
| D 1121SH | 4500 | 2,8 | 17,5 | 1530 | 5,6 | 1200**) | 3,5**) | 0,0075 | 140 | D120.26K/116 |
| D 1331 SH | 4500 | 2,8 | 28 | 3920 | 4,2 | 1500**) | 3,5**) | 0,0075 | 140 | D120.26K/116 |
| D 931 SH | 6500 | 3,2 | 16 | 1280 | 5,6 | 1300**) | 3,5**) | 0,0100 | 140 | D100.26K/116 |
| D 1131 SH | 6500 | 3,2 | 22 | 2400 | 5,6 | 1300**) | 3,5**) | 0,0075 | 140 | D120.26K/116 |
| D 1951 SH | 6500 | 3,2 | 44 | 9680 | 4,0 | 1800**) | 5,0**) | 0,0045 | 140 | D150.26K/116 |

*) Estimate failure rate λ ~ 100 fit **) Clamp circuit L = 0,25 µH

# GTO – Freewheeling Diodes

| Type | $V_{(DRM)}$ V | $V_{(D)D}$ *) kV Tc = 25 typ. | $I_{(FSM)}$ kA sin, 10 ms $T_{vj\,max}$ | $\int i^2dt$ $A^2s \cdot 10^3$ sin, 10 ms $T_{vj\,max}$ | $V_{(F)}/I_{(FM)}$ V/2,5 kA $T_{vj} = T_{vj\,max}$ sin | $I_{(RM)}$**) A di/dt = 250 A/µs $I_{(FM)}$ = 1 kA $T_{vj} = T_{vj\,max}$ | $Q_{(rr)}$**) mAs di/dt = 250 A/µs $I_{(FM)}$ = 1 kA $T_{vj} = T_{vj\,max}$ | $(-di/dt)_{com}$ a/µs | $R_{thJC}$ °C/W DC | $T_{vj\,max}$ °C | Outline / page |
|---|---|---|---|---|---|---|---|---|---|---|---|
| D 1170 S | 2000, 2500 | 1,25 | 24,0 | 2880 | 2,62/6,4 | 580 | 1,7 | | 0,0184 | 120 | D75.26K/115 |
| D 721 S | 3500 … 4500 | 2,00 | 15,0 | 1130 | 3,5/2,5 | 600 | 1,7 | 500 | 0,0180 | 125 | D76.26K/116 |
| D 1461 S | 3500 … 4500 | 2,00 | 32,0 | 5120 | 2,5/2,5 | 840 | 2,8 | 500 | 0,0125 | 140 | D100.26K/116 |
| D 1251 S | 4500 | 2,5 | 18,0 | 1620 | 2,5/2,5 | 800 | 3,0 | 500 | 0,0100 | 140 | D76.14K/116 |
| D 921 S | 4500 | 2,5 | 32,0 | 5120 | 2,6/2,5 | 700 | 2,8 | 500 | 0,0125 | 140 | D100.26K/116 |
| D 1381 S | 4500 | 3,00 | 32,0 | 5120 | 2,6/2,5 | 700 | 2,8 | 500 | 0,0125 | 140 | D100.26K/116 |

*) Estimate failure rate λ ~ 100 fit GTO-Snubber **) $V_{(R)} = 0,5\ V_{(RRM)}$, $V_{(RM)} = 0,8\ V_{(RRM)}$



радиодетали электронные компоненты со склада и под заказ

г.Минск тел.8(017)2005646 www.fotorele.net модули EUPEC IGBT Infineon minsk17@tut.by



# GTO Snubber Diodes and general use

| Type | $V_{(RRM)}$ V | $V_{R(cr)}$ V [1] | $I_{(FSM)}$ kA sin, 10 ms $T_{vj} = T_{vj\,max}$ | $V_{(F)}/I_{(FM)}$ V/kA sin, 10 ms $T_{vj} = T_{vj\,max}$ | $V_{FRM}$ typ. V di/dt = 1000 A/µs $T_{vj} = T_{vj\,max}$ | $R_{(th)JC}$ °C/W DC | $T_{vj\,max}$ °C | Outline / page |
|---|---|---|---|---|---|---|---|---|
| D 170 S | 2500 | 1500 | 3,70 | 2,3/0,8 | | 0,1800 | 140 | DSW27.1/113 |
| D 170 U | 2500 | 1500 | 3,15 | 2,15/0,65 | | 0,2500 | 140 | DSW27.1/113 |
| D 228 S | 2500 | 1500 | 3,20 | 2,12/0,5 | | 0,0750 | 125 | D60.14/114 |
| D 56 S | 4500 | 3000 | 1,35 | 4,5/0,32 | 145 | 0,2450 | 125 | DSW27.2/113 |
| D 56 U | 4500 | 3000 | 1,20 | 4,15/0,28 | 75 | 0,3250 | 125 | DSW27.2/113 |
| D 291 S | 3500 … 4500 | 3200 | 4,50 | 4,15/1,2 | 145 | 0,0400 | 125 | D58.26K/115 |
| D 841 S | 4500 | 3200 | 15,00 | 3,5/2,5 | 75 | 0,0100 | 125 | D76.14K/116 |
| snubberless: | | | | | | | | |
| D 371 S | 4500 | 3200 | 6,00 | 3,9/1,2 | 150 | 0,0350 | 125 | D58.26K/115 |
| D 801 S | 4500 | 3200 | 14,00 | 3,7/2,5 | 85 | 0,0100 | 125 | D76.14K/116 |
| D 901 S | 3500 … 4500 | 2500 | 21,50 | 3,5/2,5 | 70 | 0,0125 | 125 | D100.26K/116 |

[1] Maximum permissible link voltage, GTO snubber diode

радиодетали электронные компоненты со склада и под заказ

# Fast Rectifier Diodes

## up to 1000 V

| Type | $V_{RRM}$ V $V_{RSM} = V_{RRM}$ + 100 V | $I_{FRMSM}$ A | $I_{FSM}$ kA 10 ms $T_{vj\,max}$ | $\int i^2dt$ $A^2s \cdot 10^3$ 10 ms $T_{vj} = T_{vj\,max}$ | $I_{FAVM}/T_c$ A/°C 180° sinus | $V_{(TO)}$ V $T_{vj} = T_{vj\,max}$ | $r_T$ mΩ $T_{vj} = T_{vj\,max}$ | $I_{RM}$ A $T_{vj\,max}$ $i_F = I_{FAVM}$, $di_F/dt = 50$ A/µs | $R_{thJC}$ °C/W 180 ° el sin | $T_{vj\,max}$ °C | Outline / page |
|---|---|---|---|---|---|---|---|---|---|---|---|
| D 138 S | 900 … 1000 | 230 | 1,60 | 12,80 | 138/85 | 1,32 | 2,20 | 47 [1] | 0,140 | 125 | D41.14/114 |
| ■ D 358 S | 600 … 1000 | 730 | 5,20 | 135,20 | 358/100 | 1,05 | 0,80 | 70 | 0,079 | 150 | D41.14/114 |
| D 648 S | 800 … 1000 | 1400 | 10,10 | 510,05 | 648/100 | 1,05 | 0,43 | 82 | 0,044 | 150 | D50.14/114 |
| D 649 S | 800 … 1000 | 1400 | 10,10 | 510,05 | 650/96 | 1,05 | 0,43 | 82 | 0,048 | 150 | D57.26/114 |

[1] $i_{FM} = 225$ A, $-di_F/dt = 100$ A/µs

## up to 1400 V

| Type | $V_{RRM}$ V $V_{RSM} = V_{RRM}$ + 100 V | $I_{FRMSM}$ A | $I_{FSM}$ kA 10 ms $T_{vj\,max}$ | $\int i^2dt$ $A^2s \cdot 10^3$ 10 ms $T_{vj} = T_{vj\,max}$ | $I_{FAVM}/T_c$ A/°C 180° sinus | $V_{(TO)}$ V $T_{vj} = T_{vj\,max}$ | $r_T$ mΩ $T_{vj} = T_{vj\,max}$ | $I_{RM}$ A $T_{vj\,max}$ $i_F = I_{FAVM}$, $di_F/dt = 50$ A/µs | $R_{thJC}$ °C/W 180 ° el sin | $T_{vj\,max}$ °C | Outline / page |
|---|---|---|---|---|---|---|---|---|---|---|---|
| D 188 S | 1000 … 1400 | 290 | 1,90 | 18,05 | 185/100 | 1,00 | 1,80 | 80 | 0,150 | 150 | D41.14/114 |
| ■ D 211 S | 1000 … 1400 | 400 | 4,30 | 92,45 | 211/100 | 1,00 | 1,00 | 100 | 0,155 | 150 | DSW27/113 |
| ■ D 211 U | 1000 … 1400 | 400 | 3,90 | 76,05 | 150/100 | 1,00 | 1,00 | 100 | 0,245 | 150 | DSW27/113 |
| D 238 S | 1200 | 455 | 3,20 | 51,20 | 238/85 | 1,45 | 1,10 | 45 | 0,080 | 125 | D41.14/114 |
| D 368 S | 1000 … 1400 | 730 | 5,20 | 135,20 | 368/100 | 1,00 | 0,80 | 102 | 0,080 | 150 | D41.14/114 |
| D 658 S | 1000 … 1400 | 1400 | 10,10 | 510,05 | 658/100 | 1,00 | 0,45 | 122 | 0,044 | 150 | D50.14/114 |
| D 659 S | 1000 … 1400 | 1400 | 10,10 | 510,05 | 660/95 | 1,00 | 0,45 | 122 | 0,048 | 150 | D57.26/114 |

■ Not for new design



радиодетали электронные компоненты со склада и под заказ

г.Минск тел.8(017)2005646 www.fotorele.net модули EUPEC IGBT Infineon minsk17@tut.by



# Fast Rectifier Diodes

## up to 2600 V

| Type | $V_{RRM}$ V $V_{RSM} = V_{RRM} + 100$ V | $I_{FRMSM}$ A | $I_{FSM}$ kA 10 ms $T_{vj\,max}$ | $\int i^2dt$ $A^2s \cdot 10^3$ 10 ms $T_{vj} = T_{vj\,max}$ | $I_{FAVM}/T_c$ A/°C 180° sinus | $V_{(TO)}$ V $T_{vj} = T_{vj\,max}$ | $r_T$ mΩ $T_{vj} = T_{vj\,max}$ | $I_{RM}$ A $T_{vj\,max}$ $i_F = I_{FAVM}$, $di_F/dt = 50$ A/µs | $R_{thJC}$ °C/W 180 ° el sin | $T_{vj\,max}$ °C | Outline / page |
|---|---|---|---|---|---|---|---|---|---|---|---|
| D 170 S | 2500 | 400 | 3,70 | 68,45 | 170/85 | 1,10 | 1,400 | 340 [2] | 0,190 | 140 | DSW27.1/113 |
| D 170 U | 2500 | 330 | 3,15 | 49,60 | 170/64 | 1,10 | 1,500 | 340 [2] | 0,260 | 140 | DSW27.1/113 |
| D 228 S | 2200, 2500 | 450 | 3,20 | 51,20 | 228/85 | 1,18 | 1,800 | 280 | 0,080 | 125 | D41.14/114 |
| D 348 S | 1600 … 2000 | 645 | 4,60 | 105,80 | 348/100 | 1,00 | 0,900 | 160 | 0,080 | 150 | D41.14/114 |
| D 438 S | 1600 … 2000 | 740 | 5,30 | 140,50 | 440/100 | 1,14 | 0,725 | 770 [3] | 0,059 | 150 | D41.14/114 |
| D 440 S | 1600 … 2000 | 740 | 5,30 | 140,50 | 440/100 | 1,14 | 0,725 | 770 [3] | 0,059 | 150 | D57.26K/115 |
| ■ D 509 S | 2400 … 2600 | 1050 | 7,50 | 281,25 | 509/100 | 1,00 | 0,800 | 205 | 0,049 | 150 | D57.26/114 |
| D 675 S | 2000, 2500 | 1200 | 8,50 | 361,00 | 675/85 | 1,25 | 0,500 | 860 [4] | 0,039 | 140 | D57.26K/115 |
| D 689 S | 2000 … 2600 | 1600 | 11,50 | 661,25 | 690/100 | 1,00 | 0,500 | 230 | 0,039 | 150 | D57.26/114 |
| D 690 S | | | | | | | | | | | D57.26K/115 |
| D 1169 S | 2000, 2500 | 3360 | 24,00 | 2880,00 | 1170/85 | 1,16 | 0,210 | 580 [5] | 0,0194 | 125 | D75.26/114 |
| D 1170 S | 2000, 2500 | 3360 | 24,00 | 2880,00 | 1170/85 | 1,16 | 0,210 | 580 [5] | 0,0194 | 125 | D75.26K/115 |
| D 1408 S | 2000, 2500 | 3360 | 24,00 | 2880,00 | 1410/85 | 1,16 | 0,210 | 580 [5] | 0,0150 | 125 | D75.14/114 |

## up to 6000 V

| Type | $V_{RRM}$ V $V_{RSM} = V_{RRM} + 100$ V | $I_{FRMSM}$ A | $I_{FSM}$ kA 10 ms $T_{vj\,max}$ | $\int i^2dt$ $A^2s \cdot 10^3$ 10 ms $T_{vj} = T_{vj\,max}$ | $I_{FAVM}/T_c$ A/°C 180° sinus | $V_{(TO)}$ V $T_{vj} = T_{vj\,max}$ | $r_T$ mΩ $T_{vj} = T_{vj\,max}$ | $I_{RM}$ A $T_{vj\,max}$ $i_F = I_{FAVM}$, $di_F/dt = 50$ A/µs | $R_{thJC}$ °C/W 180 ° el sin | $T_{vj\,max}$ °C | Outline / page |
|---|---|---|---|---|---|---|---|---|---|---|---|
| D 56 S | 4000, 4500 | 160 | 1,35 | 9,1 | 56/85 | 1,64 | 8,00 | 230 [1] | 0,2600 | 125 | DSW27.2/113 |
| D 56 U | 4000, 4500 | 140 | 1,20 | 7,2 | 56/73 | 1,64 | 8,00 | 230 [1] | 0,3400 | 125 | DSW27.2/113 |

[1] $i_{FM} = 150$ A, $-di_F/dt = 200$ A/µs
[2] $i_{FM} = 500$ A, $-di_F/dt = 200$ A/µs
[3] $i_{FM} = 500$ A, $-di_F/dt = 250$ A/µs
[4] $i_{FM} = 1600$ A, $-di_F/dt = 600$ A/µs
[5] $i_{FM} = 1000$ A, $-di_F/dt = 250$ A/µs
■ Not for new design

радиодетали электронные компоненты со склада и под заказ

# Avalanche Rectifier Diodes

| Type | $V_{RRM}$ V $V_{RSM} = V_{RRM}$ + 100 V | $I_{FRMSM}$ A | $I_{FSM}$ kA 10 ms, $T_{vj\,max}$ | $\int i^2dt$ $A^2s \cdot 10^3$ 10 ms, $T_{vj} = T_{vj\,max}$ | $I_{FAVM}/T_c$ A/°C 180° sinus | $V_{(TO)}$ V $T_{vj} = T_{vj\,max}$ | $r_T$ mΩ $T_{vj} = T_{vj\,max}$ | $V_{(BR)}$ A min. | $R_{thJC}$ °C/W 180 ° el sin | $T_{vj\,max}$ °C | Outline / page |
|---|---|---|---|---|---|---|---|---|---|---|---|
| D 126 A 45 | 4500 | 315 | 2,30 | 26,45 | 126/100 | 0,86 | 3,2 | 4800 | 0,257 | 160 | DSW27.2/113 |
| | | | | | 200/35 | | | | | | |
| D 126 B 45 | 4500 | 300 | 2,10 | 22,00 | 126/80 | 0,86 | 3,2 | 4800 | 0,337 | 160 | DSW27.2/113 |
| | | | | | 190/9 | | | | | | |
| DD 126 A 45 K-B9* | 4500 | 220 | 2,30 | 26,45 | 128/100 | 0,86 | 3,2 | 4800 | 0,060 | 160 | DP30.1/107 |

* Non isolated module

# Welding Diodes

## up to 600 V

| Type | $V_{RRM}$ V $V_{RSM} = V_{RRM}$ + 50 V | $I_{FRMSM}$ A | $I_{FSM}$ kA 10 ms, $T_{vj\,max}$ | $\int i^2dt$ $A^2s \cdot 10^3$ 10 ms $T_{vj\,max}$ | $I_{FAVM}/T_c$ A/°C 180° sinus | $V_{(TO)}$ V $T_{vj} = T_{vj\,max}$ | $r_T$ mΩ $T_{vj} = T_{vj\,max}$ | $R_{thJC}$ °C/W 180 ° el sin | $T_{vj\,max}$ °C | Outline / page |
|---|---|---|---|---|---|---|---|---|---|---|
| 25 DN 06 | 600 | 1800 | 12,75 | 813 | 1145/155 | 0,7 | 0,188 | 0,0174 | 180 | 25DN06/115 |
| 38 DN 06 | 600 | 6100 | 32,30 | 5200 | 3885/120 | 0,66 | 0,060 | 0,0124 | 180 | 38DN06/115 |
| 46 DN 06 | 600 | 8000 | 52,00 | 13500 | 5100/118 | 0,7 | 0,047 | 0,00935 | 180 | 46DN06/115 |
| 46 DN 06 S 01 | 600 | 9800 | 52,00 | 13500 | 6240/125 | 0,66 | 0,047 | 0,0064 | 180 | 46DN06/115 |
| 56 DN 06 | 600 | 10050 | 70,00 | 24500 | 6400/116 | 0,7 | 0,040 | 0,0062 | 180 | 56DN06/115 |
| 56 DN 06 S 01 | 600 | 13200 | 70,00 | 24500 | 8400/111 | 0,66 | 0,036 | 0,0058 | 180 | 56DN06/115 |
| 65 DN 06 | 600 | 13300 | 95,00 | 45000 | 8470/98 | 0,7 | 0,027 | 0,0047 | 180 | 65DN06/115 |
| 65 DN 06 S 01 | 600 | 17900 | 95,00 | 45000 | 11400/107 | 0,66 | 0,027 | 0,0047 | 180 | 65DN06/115 |

г.Минск тел.8(017)2005646 www.fotorele.net модули EUPEC IGBT Infineon minsk17@tut.by



# Insulated Cells

| Type | $V_M$ V | $V_{RMS}$ $V_{DC}$ | CTI - Value | Iso-Class | $T_{c\,(max)}$ °C | $R_{thCK}$ °C/W | $R_{thC\text{-}C\,(typ)}$ °C/W | at clamp. force | $F_{max}$ kN | Weight g | Outline / page |
|---|---|---|---|---|---|---|---|---|---|---|---|
| ISO 57/26 | 6400 | 2520 | 250 | III a | 150 | 0,010 | 0,088 | at 12kN | 30 | 260 | I57.26/117 |
| ISO 72/8 | 2250 | 700 | 250 | III a | 150 | 0,005 | 0,028 | at 20kN | 45 | 130 | I72.8/117 |
| ISO 75/14 | 3500 | 1250 | 250 | III a | 150 | 0,005 | 0,0435 | at 20kN | 45 | 245 | I75.14/117 |
| ISO 75/26 | 5900 | 2250 | 250 | III a | 150 | 0,005 | 0,048 | at 20kN | 45 | 460 | I75.26/117 |
| ISO 65/35 | 10600 | 4180 | 250 | III a | 150 | 0,010 | 0,136 | at 12kN | 30 | 350 | I65.35/117 |
| ISO 120/35 | 11700 | 4400 | 250 | III a | 150 | 0,002 | 0,0275 | at 30kN | 70 | 1650 | I120.35/117 |

Insulating material: AlN

радиодетали электронные компоненты со склада и под заказ

г.Минск тел.8(017)2005646 www.fotorele.net модули EUPEC IGBT Infineon minsk17@tut.by

# Possible Combinations of Disc Devices and Heatsinks

for air cooling
for water cooling

| applicable up to $V_{RRM}$ | line voltage up to | BE/KK = Elements per Heatsink | | | | | | | | | | | |
|---|---|---|---|---|---|---|---|---|---|---|---|---|---|
| 7000 V | 2500 V | 1 | K0.05.7F | K0.05.7F | K0.05.7F | | K0.05.7F | | K0.05.7F | | | | |
| | | 1 | | | | | | | KE01 | KE01 | KE01 | KE01 | KE01 |
| | | 2 | | | | | | | KE02 | KE02 | KE02 | KE02 | |
| | | 2 | K0.08.7F | K0.08.7F | K0.08.7F | | K0.08.7F | | K0.08.7F | | | | |
| 6000 V | 2000 V | 1 | K0.05F | K0.05F | K0.05F | | K0.05F | | K0.05F | K0.048F | K0.048F | | |
| | | 2 | K0.08F K0.92S | K0.08F K0.92S | K0.08F K0.92S | | K0.08F K0.92S | | K0.08F K0.92S | | | | |
| 2600 V | 1500 V | 2, 4, 6 | | | | | | | K53 K63 | K53 K63 | K53 K63 | K53 K63 | K63 |
| 2200 V | 690 V | 1 | KK32 | KK32 | | | | | | | | | |
| | | 2 | KK34 | KK34 | | | | | | | | | |
| | | 1 | K0.12F K0.36S | K0.12F K0.36S | | | K0.12F K0.36S | | | | | | |
| | | 2 | K0.17F K0.22F | K0.17F K0.22F | | | K0.17F K0.22F | | | | | | |
| | | 2 | K0.65S | K0.65S | | | K0.65S | | | | | | |
| | | 2 | K0.024W | K0.024W | K0.024W | K0.024W | K0.024W | K0.024W | K0.024W | | | | |
| | | 2, 4, 6 | KA20;KC20;KD20 | KA20;KC20;KD20 | KA20;KC20;KD20 | KA20;KC20;KD20 | KA20;KC20;KD20 | | | | | | |
| Outline | | | D41.14<br>T41.14 | D50.14<br>T50.14 | D57.26<br>T57.26 | D60.8 | D60.14<br>T60.14 | D73.8 | D75.26<br>T75.26 | D100.26<br>T100.26 | D110.26<br>T110.26<br>T110.35 | D120.35<br>T120.35<br>T120.26 | T150.35 |

according to EN50178 pollution degree 2
pollution degree 3 on request



радиодетали электронные компоненты со склада и под заказ

г.Минск тел.8(017)2005646 www.fotorele.net модули EUPEC IGBT Infineon minsk17@tut.by



# Examples of implemented ModSTACK™

| Up to 400 Vac | Irms [A] | at fsw [Hz] | Remarks | Size Outline/Page |
|---|---|---|---|---|
| B6I 400/600-460-G | 460 | 3000 | inverter | MS2/80 |
| B6I 400/600-480-W | 480 | 3000 | inverter | MS2/80 |

| Up to 500 Vac | Irms [A] | at fsw [Hz] | Remarks | Size Outline/Page |
|---|---|---|---|---|
| B6I 500/800-220-F | 220 | 2500 | inverter | MS1/79 |
| B6I 500/800-220-G | 220 | 2500 | inverter | MS1/79 |
| B6I 500/800-250-W | 250 | 2500 | inverter | MS1/79 |
| 2B6I 500/800-330-G | 2 x 330 | 3000 | 2 inverter parallel | MS3/81 |
| 2B6I 500/800-350-W | 2 x 350 | 3000 | 2 inverter parallel | MS3/81 |
| 2B6I 500/800-400-G | 2 x 400 | 3000 | 2 inverter parallel | MS3/81 |
| 2B6I 500/800-450-W | 2 x 450 | 3000 | 2 inverter parallel | MS3/81 |
| 2B6I 500/800-600-W | 2 x 600 | 3000 | 2 inverter parallel | MS4/82 |

Other topologies and ratings possible. Please refer to page 66.

| Up to 690 Vac | Irms [A] | at fsw [Hz] | Remarks | Size Outline/Page |
|---|---|---|---|---|
| B6I 690/1100-100-G | 100 | 2500 | inverter | MS1/79 |
| B6I 690/1100-150-G | 150 | 2500 | inverter | MS1/79 |
| B6I 690/1100-250-G | 250 | 2250 | inverter | MS2/80 |
| B6I 690/1100-375-G | 375 | 1250 | inverter | MS2/80 |
| B6I 690/1100-460-W | 460 | 2500 | inverter | MS2/80 |
| B6I+B6I 690/1100-300-G | 300 | 2250 | AC/AC converter | MS3/81 |
| B6I+B6I 690/1100-330-G | 330 | 2250 | AC/AC converter | MS3/81 |
| 2B6I 690/1100-330-G | 2 x 330 | 2250 | 2 inverter parallel | MS3/81 |
| 2B6I 690/1100-400-W | 2 x 400 | 2500 | 2 inverter parallel | MS3/81 |
| B6I+B6I 690/1100-650-G | 650 | 2250 | AC/AC converter | MS4/82 |
| 2B6I 690/1100-600-G | 2 x 600 | 2250 | 2 inverter parallel | MS4/82 |

Other topologies and ratings possible. Please refer to page 66.

**Mod STACK™ Type Designation System:**

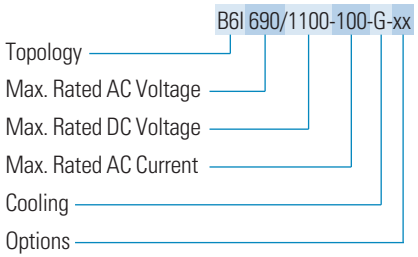


**Descriptors**
G = forced air cooling
W = water cooling
F = fan included

**Options**
M = Master
S = slave, single use
O = fiber optic interface
X = voltage signal interface

**General Information:**
Nominal AC current is rated for a certain switching frequency and at $T_{amb}$ = 45 °C for air cooled IGBT stacks and 40 °C for water cooled stacks. Starting from nominal current a maximum current of 1,2 x$I_{nom}$ is possible. Higher switching frequencies result in a derating of the nominal output current.

радиодетали электронные компоненты со склада и под заказ

| IGBT Stack Topology | Acronym |
|---|---|
| 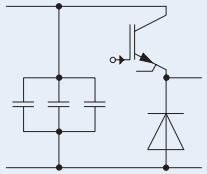 | 1/2B2IHA |
| 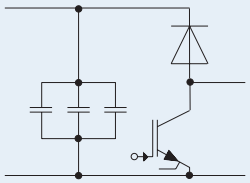 | 1/2B2IHK |
| 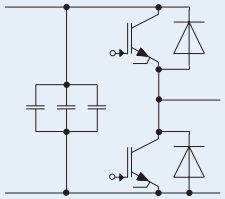 | 1/2B2I |
| 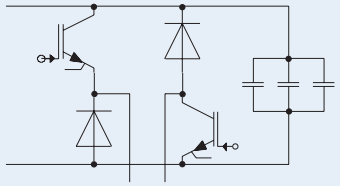 | B2IH |
| 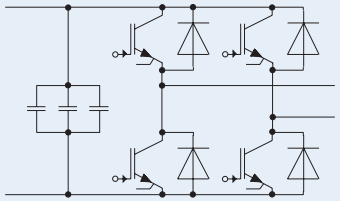 | B2I |

| IGBT Stack Topology | Acronym |
|---|---|
| 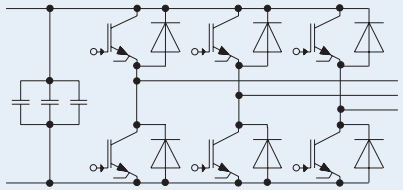 | B6I |
| 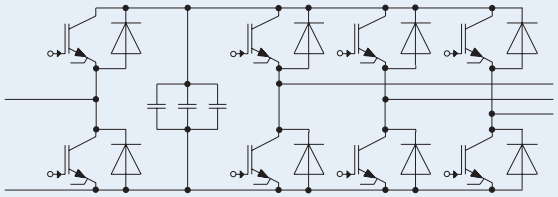 | 1/2B2I + B6I |
| 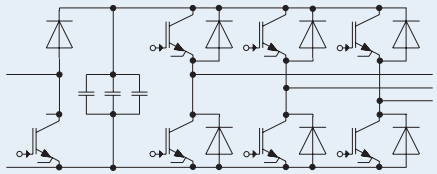 | 1/2B2IHK + B6I |
| 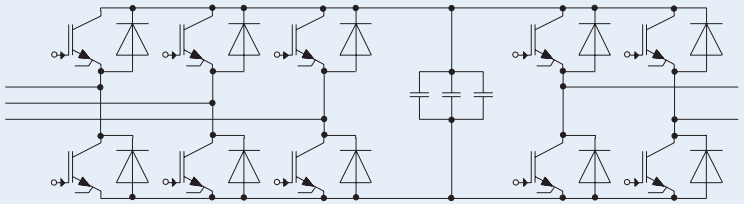 | B6I + B2I |
| 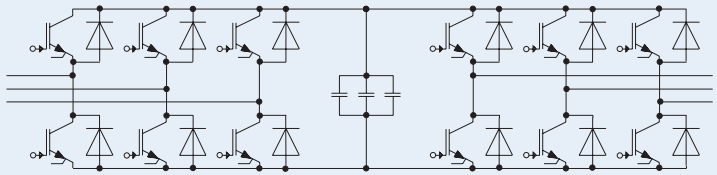 | B6I + B6I or 2B6I for parallel operation |

г.Минск тел.8(017)2005646 www.fotorele.net модули EUPEC IGBT Infineon minsk17@tut.by



# PrimeSTACK™

| Type | Implemented IGBT Module | Outline | Outline / page |
|---|---|---|---|
| With 600V IGBT Modules | | | |
| 2PS0600R06DLC-2G | BSM300GB60DLC | C2 air cooling | PS_C2G/83 |
| 2PS0900R06DLC-3G | BSM300GB60DLC | C3 air cooling | PS_C3G/85 |
| 2PS1200R06DLC-4G | BSM300GB60DLC | C4 air cooling | PS_C4G/87 |
| 2PS0800R06DN2-2G | BSM400GB60DN2 | C2 air cooling | PS_C2G/83 |
| 2PS1200R06DN2-3G | BSM400GB60DN2 | C3 air cooling | PS_C3G/85 |
| 2PS1600R06DN2-4G | BSM400GB60DN2 | C4 air cooling | PS_C4G/87 |
| 6PS0300R06DLC-3G | BSM300GB60DLC | C3 air cooling | PS_C3G/85 |
| 4PS0300R06DLC-3G | BSM300GB60DLC | C3 air cooling | PS_C3G/85 |
| 6PS0400R06DN2-3G | BSM400GB60DN2 | C3 air cooling | PS_C3G/85 |
| With 1200V IGBT Modules | | | |
| 2PS0200R12DLC-2G | BSM100GB120DLC | C2 air cooling | PS_C2G/83 |
| 2PS0300R12DLC-2G | BSM150GB120DLC | C2 air cooling | PS_C2G/83 |
| 2PS0400R12DLC-2G | BSM200GB120DLC | C2 air cooling | PS_C2G/83 |
| 2PS0600R12DLC-2G | BSM300GB120DLC | C2 air cooling | PS_C2G/83 |
| 2PS0300R12DLC-3G | BSM100GB120DLC | C3 air cooling | PS_C3G/85 |
| 2PS0450R12DLC-3G | BSM150GB120DLC | C3 air cooling | PS_C3G/85 |
| 2PS0600R12DLC-3G | BSM200GB120DLC | C3 air cooling | PS_C3G/85 |
| 2PS0900R12DLC-3G | BSM300GB120DLC | C3 air cooling | PS_C3G/85 |
| 2PS0400R12DLC-4G | BSM100GB120DLC | C4 air cooling | PS_C4G/87 |
| 2PS0600R12DLC-4G | BSM150GB120DLC | C4 air cooling | PS_C4G/87 |
| 2PS0800R12DLC-4G | BSM200GB120DLC | C4 air cooling | PS_C4G/87 |
| 2PS1200R12DLC-4G | BSM300GB120DLC | C4 air cooling | PS_C4G/87 |
| 6PS0100R12DLC-3G | BSM100GB120DLC | C3 air cooling | PS_C3G/85 |
| 6PS0150R12DLC-3G | BSM150GB120DLC | C3 air cooling | PS_C3G/85 |
| 6PS0200R12DLC-3G | BSM200GB120DLC | C3 air cooling | PS_C3G/85 |
| 6PS0300R12DLC-3G | BSM300GB120DLC | C3 air cooling | PS_C3G/85 |
| 2PS0400R12KE3-2G | FF200R12KE3 | C2 air cooling | PS_C2G/83 |
| 2PS0600R12KE3-2G | FF300R12KE3 | C2 air cooling | PS_C2G/83 |
| 2PS0800R12KE3-2G | FF400R12KE3 | C2 air cooling | PS_C2G/83 |
| 2PS0600R12KE3-3G | FF200R12KE3 | C3 air cooling | PS_C3G/85 |
| 2PS0900R12KE3-3G | FF300R12KE3 | C3 air cooling | PS_C3G/85 |
| 2PS1200R12KE3-3G | FF400R12KE3 | C3 air cooling | PS_C3G/85 |
| 2PS0800R12KE3-4G | FF200R12KE3 | C4 air cooling | PS_C4G/87 |
| 2PS1200R12KE3-4G | FF300R12KE3 | C4 air cooling | PS_C4G/87 |
| 2PS1600R12KE3-4G | FF400R12KE3 | C4 air cooling | PS_C4G/87 |
| 6PS0200R12KE3-3G | FF200R12KE3 | C3 air cooling | PS_C3G/85 |
| 6PS0300R12KE3-3G | FF300R12KE3 | C3 air cooling | PS_C3G/85 |
| 6PS0400R12KE3-3G | FF400R12KE3 | C3 air cooling | PS_C3G/85 |
| 2PS1200R12KE3-3W | FF400R12KE3 | C3 water cooling | PS_C3W/86 |

Other PrimeStacks on request

| Type | Implemented IGBT Module | Outline | Outline / page |
|---|---|---|---|
| 2PS0800R12KE3-2W | FF400R12KE3 | C2 water cooling | PS_C2W/84 |
| 2PS0200R12KS4-2G | FF100R12KS4 | C2 air cooling | PS_C2G/83 |
| 2PS0300R12KS4-2G | FF150R12KS4 | C2 air cooling | PS_C2G/83 |
| 2PS0400R12KS4-2G | FF200R12KS4 | C2 air cooling | PS_C2G/83 |
| 2PS0600R12KS4-2G | FF300R12KS4 | C2 air cooling | PS_C2G/83 |
| 2PS0300R12KS4-3G | FF100R12KS4 | C3 air cooling | PS_C3G/85 |
| 2PS0450R12KS4-3G | FF150R12KS4 | C3 air cooling | PS_C3G/85 |
| 2PS0600R12KS4-3G | FF200R12KS4 | C3 air cooling | PS_C3G/85 |
| 2PS0900R12KS4-3G | FF300R12KS4 | C3 air cooling | PS_C3G/85 |
| 2PS0400R12KS4-4G | FF100R12KS4 | C4 air cooling | PS_C4G/87 |
| 2PS0600R12KS4-4G | FF150R12KS4 | C4 air cooling | PS_C4G/87 |
| 2PS0800R12KS4-4G | FF200R12KS4 | C4 air cooling | PS_C4G/87 |
| 2PS1200R12KS4-4G | FF300R12KS4 | C4 air cooling | PS_C4G/87 |
| 6PS0100R12KS4-3G | FF100R12KS4 | C3 air cooling | PS_C3G/85 |
| 6PS0150R12KS4-3G | FF150R12KS4 | C3 air cooling | PS_C3G/85 |
| 6PS0200R12KS4-3G | FF200R12KS4 | C3 air cooling | PS_C3G/85 |
| 6PS0300R12KS4-3G | FF300R12KS4 | C3 air cooling | PS_C3G/85 |
| 2PS0900R12KS4-3W | FF300R12KS4 | C3 water cooling | PS_C3W/86 |
| 6PS0300R12KS4-3W | FF300R12KS4 | C3 water cooling | PS_C3W/86 |
| With 1700V IGBT Modules | | | |
| 2PS0200R17DLC-2G | BSM100GB170DLC | C2 air cooling | PS_C2G/83 |
| 2PS0300R17DLC-2G | BSM150GB170DLC | C2 air cooling | PS_C2G/83 |
| 2PS0400R17DLC-2G | BSM200GB170DLC | C2 air cooling | PS_C2G/83 |
| 2PS0300R17DLC-3G | BSM100GB170DLC | C3 air cooling | PS_C3G/85 |
| 2PS0450R17DLC-3G | BSM150GB120DLC | C3 air cooling | PS_C3G/85 |
| 2PS0600R17DLC-3G | BSM200GB170DLC | C3 air cooling | PS_C3G/85 |
| 2PS0400R17DLC-4G | BSM100GB170DLC | C4 air cooling | PS_C4G/87 |
| 2PS0600R17DLC-4G | BSM150GB170DLC | C4 air cooling | PS_C4G/87 |
| 2PS0800R17DLC-4G | BSM200GB170DLC | C4 air cooling | PS_C4G/87 |
| 6PS0100R17DLC-3G | BSM100GB170DLC | C3 air cooling | PS_C3G/85 |
| 6PS0150R17DLC-3G | BSM150GB170DLC | C3 air cooling | PS_C3G/85 |
| 6PS0200R17DLC-3G | BSM200GB170DLC | C3 air cooling | PS_C3G/85 |
| 2PS0400R17KE3-2G | FF200R17KE3 | C2 air cooling | PS_C2G/83 |
| 2PS0600R17KE3-2G | FF300R17KE3 | C2 air cooling | PS_C2G/83 |
| 2PS0600R17KE3-3G | FF200R17KE3 | C3 air cooling | PS_C3G/85 |
| 2PS0900R17KE3-3G | FF300R17KE3 | C3 air cooling | PS_C3G/85 |
| 2PS0800R17KE3-4G | FF200R17KE3 | C4 air cooling | PS_C4G/87 |
| 2PS1200R17KE3-4G | FF300R17KE3 | C4 air cooling | PS_C4G/87 |
| 6PS0200R17KE3-3G | FF200R17KE3 | C3 air cooling | PS_C3G/85 |
| 6PS0300R17KE3-3G | FF300R17KE3 | C3 air cooling | PS_C3G/85 |

радиодетали электронные компоненты со склада и под заказ

| IGBT PrimeSTACK Topology | Acronym |
|---|---|
| 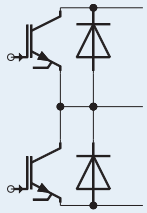 | half bridge, 2pack |
| 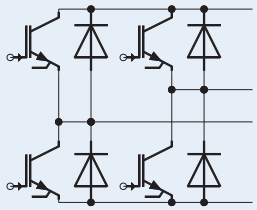 | H - bridge, 4pack |
| 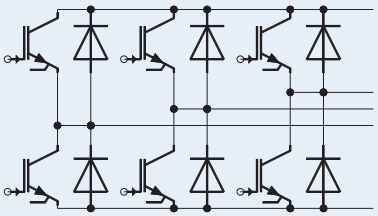 | 3 phase bridge, 6pack |
| 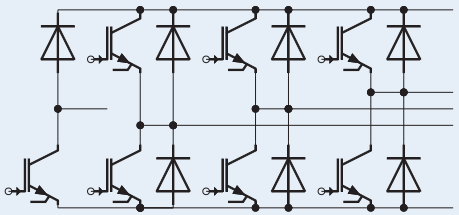 | 3 phase bridge + brake, 6pack + chopper |

PrimeSTACK™ Type Designation System:

2PS0600R12DLC-3X

- Topology (see below)
- PrimeSTACK™
- Rated Current at $T_{c.max}$ = 80°C
- Rated Voltage of Used IGBT
- Chip Type According to eupec Designation System
- Size
- Options (chopper, cooling etc.)

**Descriptors**
G = forced air cooling
W = water cooling
F = fan included

**Options**
M = Master
S = slave, single use
O = fiber optic interface
X = voltage signal interface

г.Минск тел.8(017)2005646 www.fotorele.net модули EUPEC IGBT Infineon minsk17@tut.by



## K 1.1 - M 12 — G = 0,635 kg

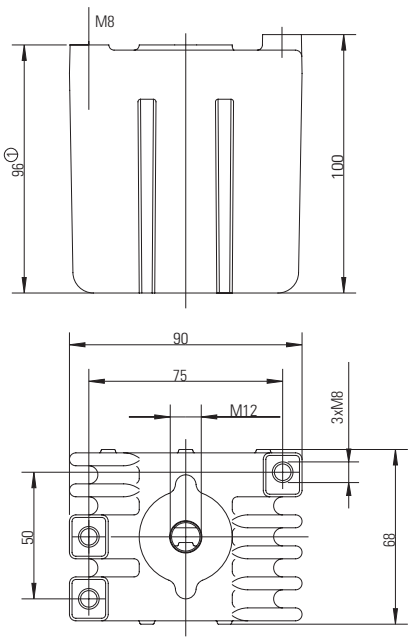


## K 0.55 - FB 54 - A — G = 1,760 kg

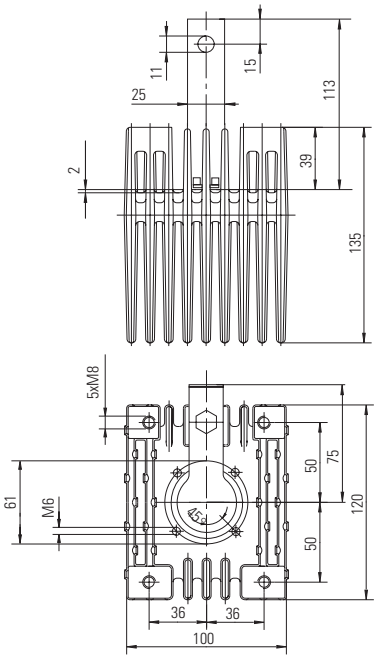


## K0.55 - M 12 — G = 1,760 kg
## K0.55 - M 24 x 1,5 — G = 1,760 kg

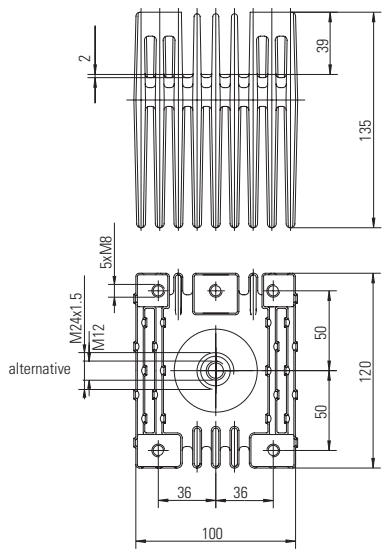


радиодетали электронные компоненты со склада и под заказ

## KM 10

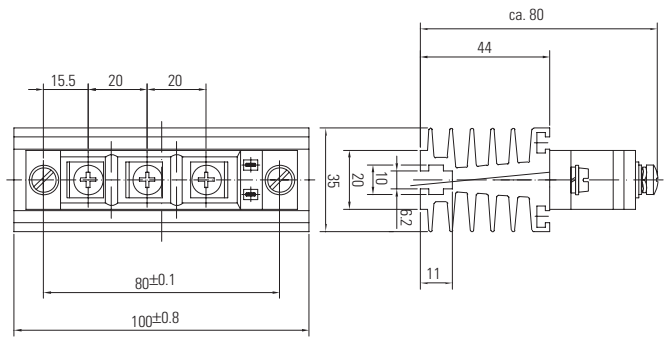


## KM 11 G = 2,1 kg
## KM 14 G = 3,1 kg
## KM 17 G = 5,3 kg
## KM 18 G = 8,8 kg

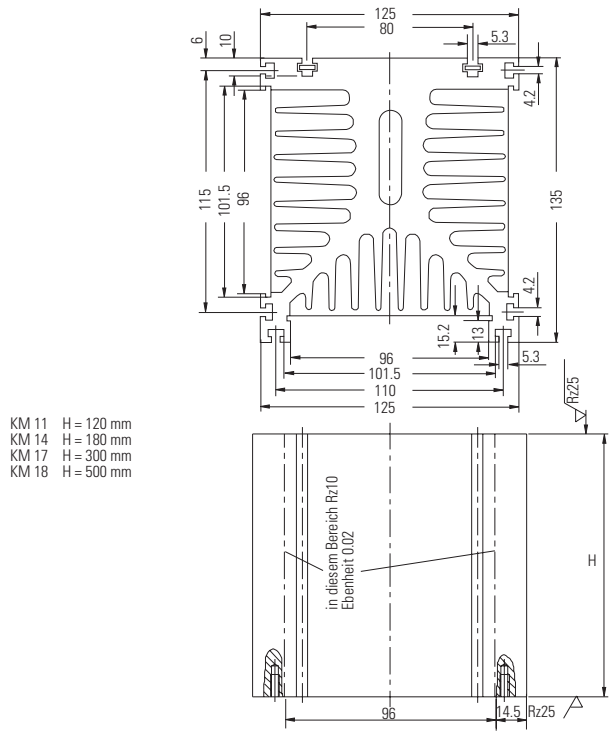


KM 11 H = 120 mm
KM 14 H = 180 mm
KM 17 H = 300 mm
KM 18 H = 500 mm


радиодетали электронные компоненты со склада и под заказ

г.Минск тел.8(017)2005646 www.fotorele.net модули EUPEC IGBT Infineon minsk17@tut.by



## KA 20.X-V

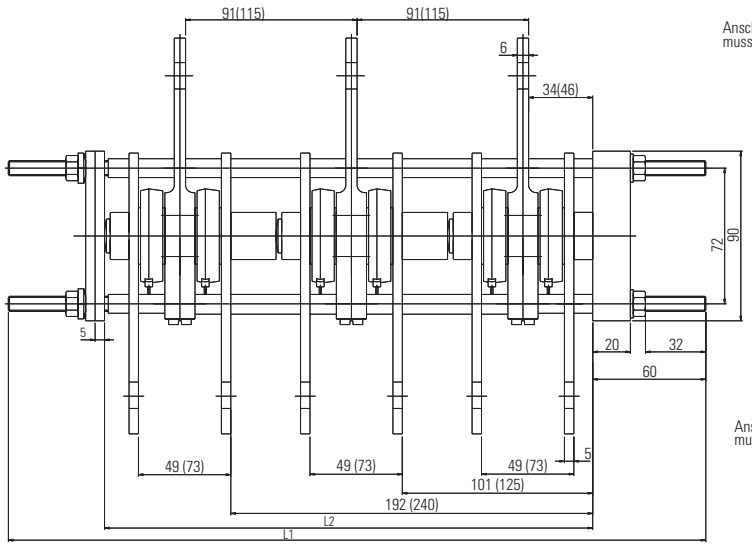


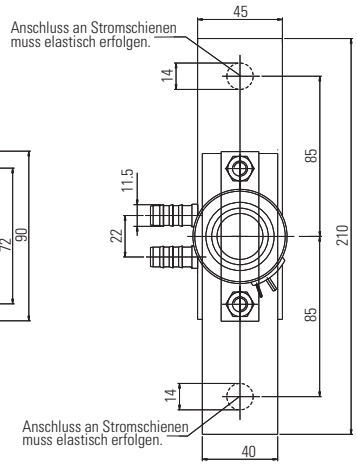


for discs Ø 41, 50, 57, 60 mm
maximum clamping force 10 kN
supply voltage 500 Veff

(...) für Bauelemente s=26

| Anzahl d. Thy./Di. | Typ | L1 | L2 |
|---|---|---|---|
| 6 (s=14mm) | -KA20.6-.. | 370 | 259 |
| 4 (s=14mm) | -KA20.4-.. | 280 | 168 |
| 2 (s=14mm) | -KA20.2-.. | 190 | 77 |
| 6 (s=26mm) | -KA20.62-.. | 445 | 331 |
| 4 (s=26mm) | -KA20.42-.. | 325 | 216 |
| 2 (s=26mm) | -KA20.22-.. | 210 | 101 |

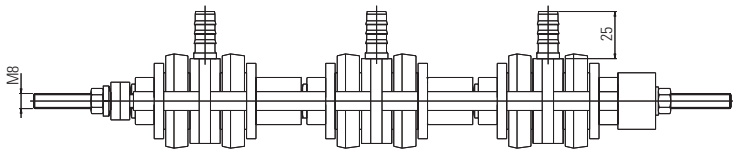


## KC 20-XE

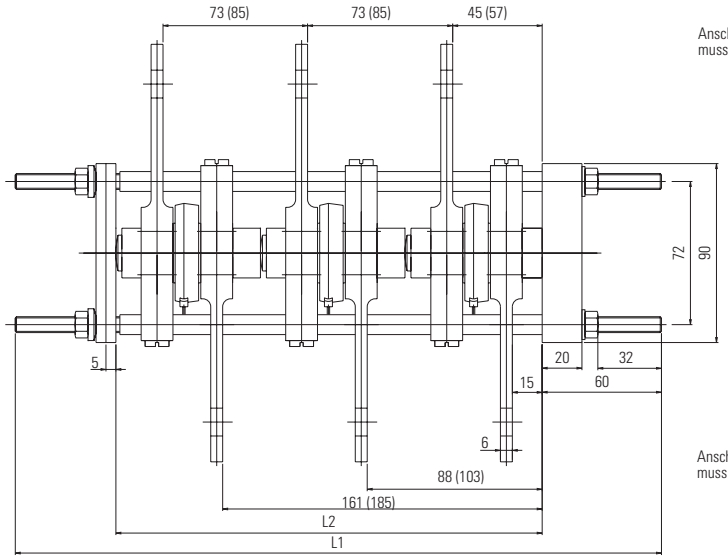


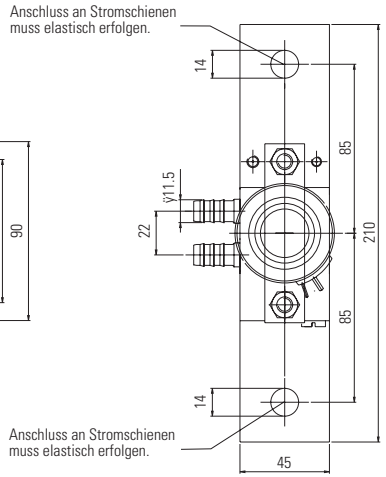


for discs Ø 41, 50, 57, 60 mm
maximum clamping force 10 kN
supply voltage 500 Veff

(...) für Bauelemente s=26

| Anzahl d. Thy./Di. | Typ | L1 | L2 |
|---|---|---|---|
| 3 (s=14mm) | -KC20-3E | 325 | 215 |
| 2 (s=14mm) | -KC20-2E | 250 | 142 |
| 1 (s=14mm) | -KC20-1E | 175 | 69 |
| 3 (s=26mm) | -KC20-3E | 360 | 251 |
| 2 (s=26mm) | -KC20-2E | 275 | 166 |
| 1 (s=26mm) | -KC20-1E | 190 | 81 |

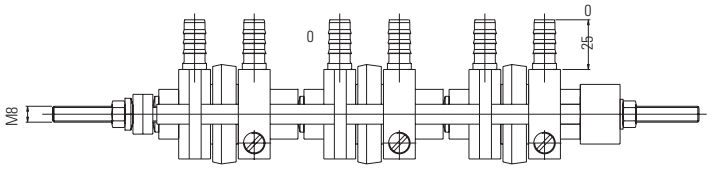


Zellenlage bei KC20.*-E

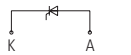


радиодетали электронные компоненты со склада и под заказ

## KD 20.X-V

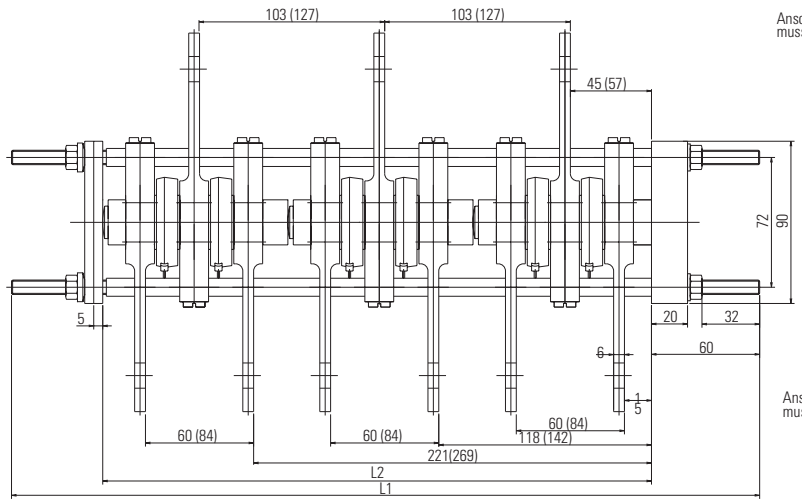


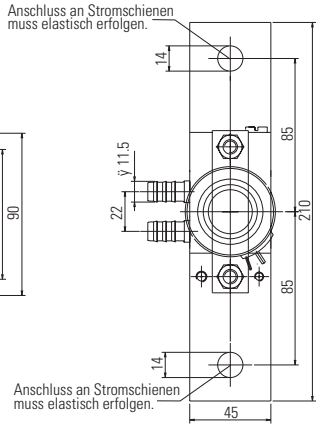


(...) für Bauelemente s=26

| Anzahl d. Thy./Di. | Typ | L1 | L2 |
|---|---|---|---|
| 6 (s=14mm) | -KD20.6-.. | 415 | 305 |
| 4 (s=14mm) | -KD20.4-.. | 310 | 202 |
| 2 (s=14mm) | -KD20.2-.. | 205 | 99 |
| 6 (s=26mm) | -KD20.62-.. | 490 | 377 |
| 4 (s=26mm) | -KD20.42-.. | 360 | 250 |
| 2 (s=26mm) | -KD20.22-.. | 230 | 123 |

for discs Ø 41, 50, 57, 60mm
maximum clamping force 10kN
supply voltage 500Veff

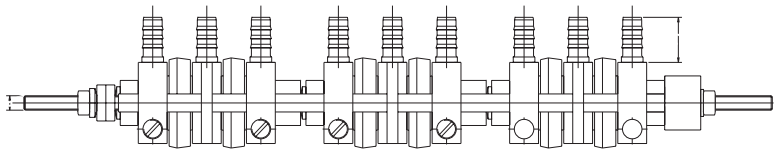

## K 0.024 W — G = 3 kg

for W1C-circuits

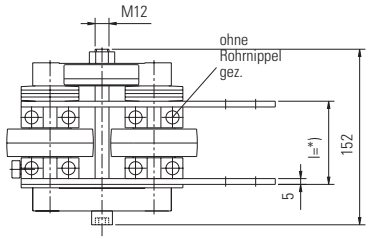


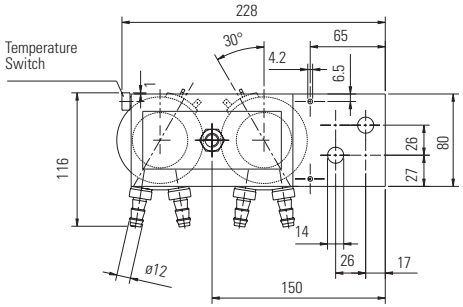


for discs Ø 50, 57, 60, 75mm

*) Bauelementhöhe 14 mm: l=60mm
Bauelementhöhe 26 mm: l=72mm

## K 0.024 W — G = 3 kg

for B- and M-circuits

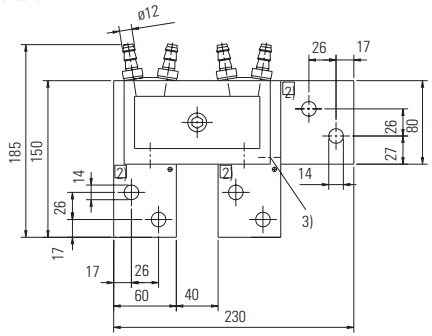


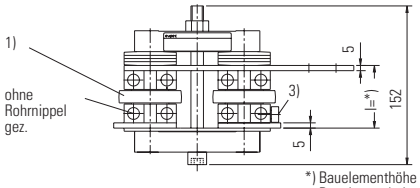


for discs Ø 50, 57, 60, 75mm

*) Bauelementhöhe 14 mm: l=60mm
Bauelementhöhe 26 mm: l=72mm

г.Минск тел.8(017)2005646 www.fotorele.net модули EUPEC IGBT Infineon minsk17@tut.by



## K 53 V — G = 17 kg

for discs Ø 110, 120mm

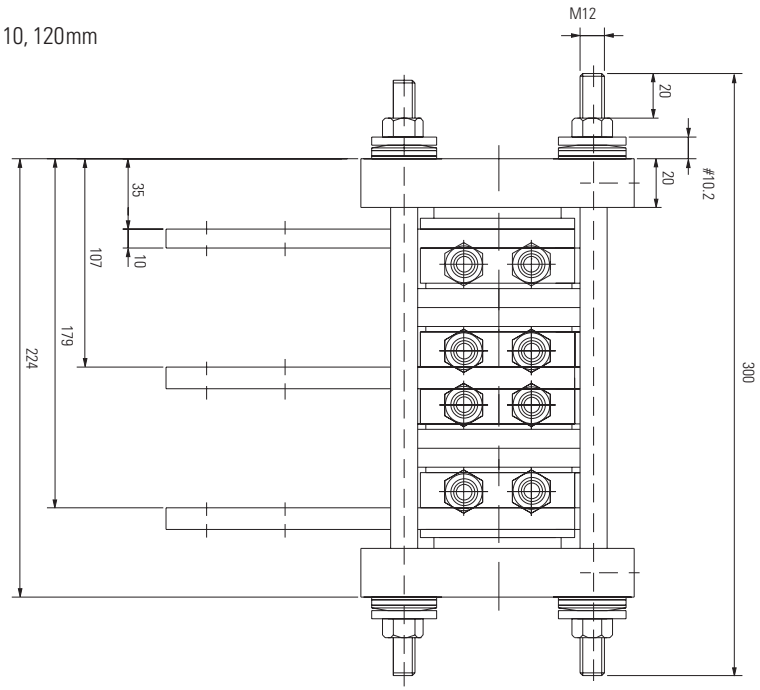


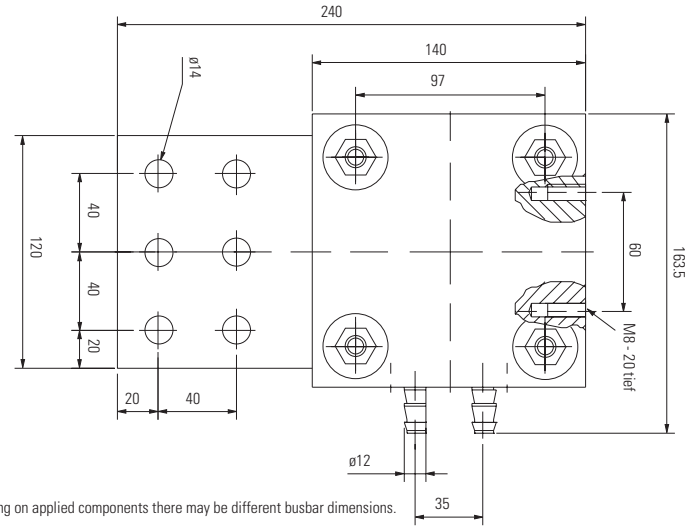


Example: Depending on applied components there may be different busbar dimensions.

## K 63 V — G = 30 kg

for discs Ø 150mm

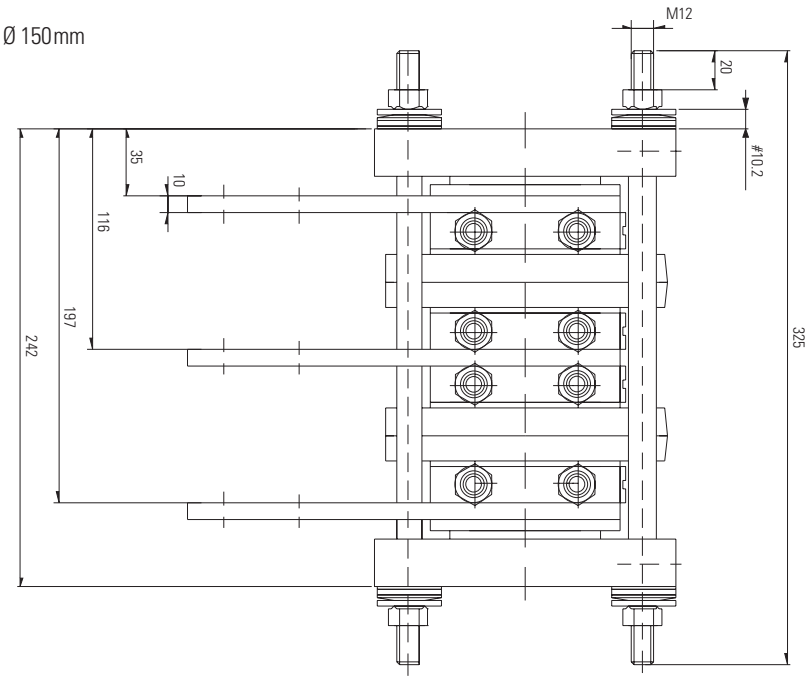


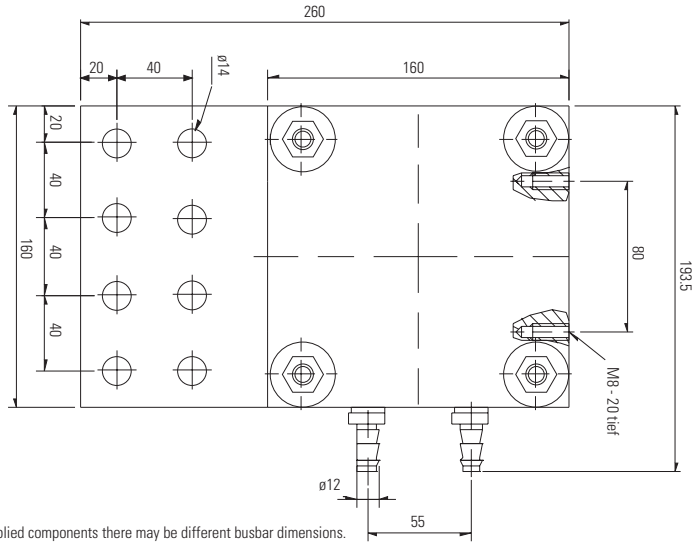


Example: Depending on applied components there may be different busbar dimensions.

радиодетали электронные компоненты со склада и под заказ

## KW 50

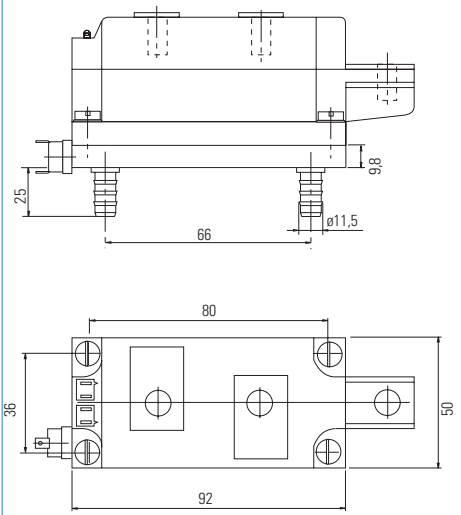


## KW 60

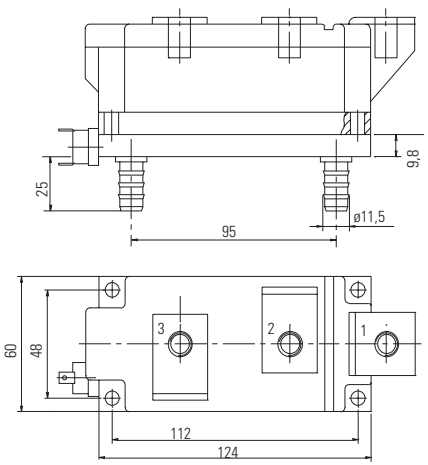


## KW 70-T

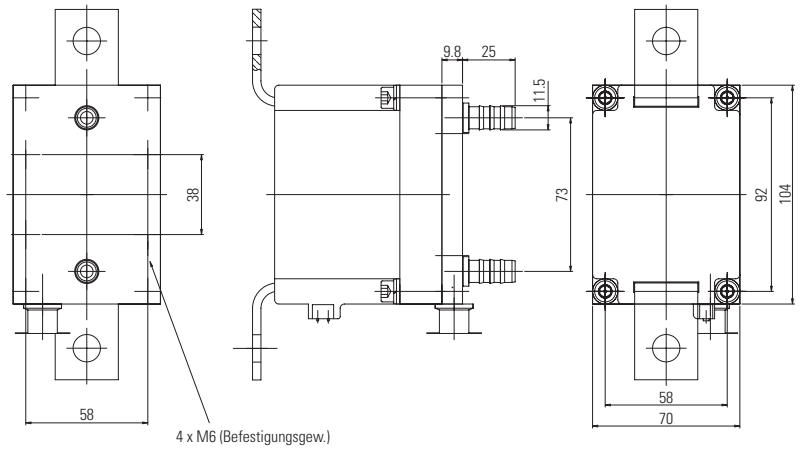


## K 0.92S

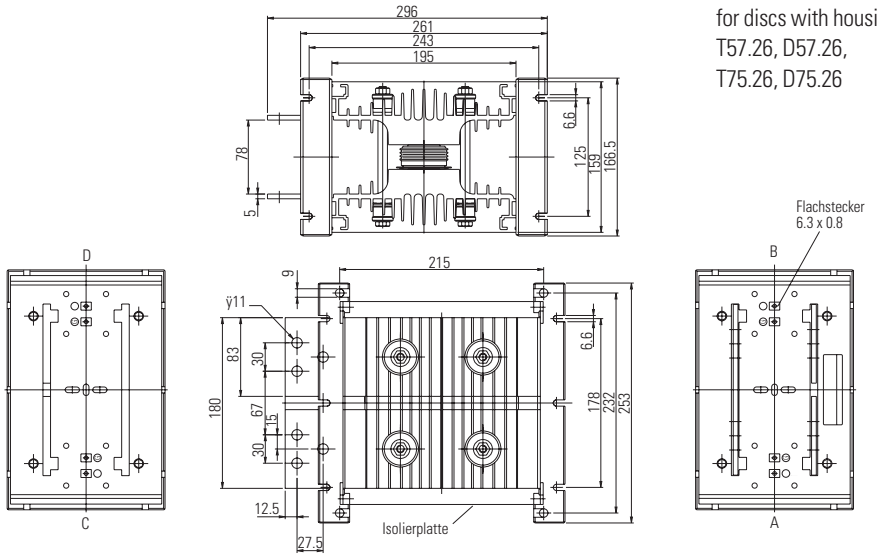


for discs with housing
T57.26, D57.26,
T75.26, D75.26

г.Минск тел.8(017)2005646 www.fotorele.net модули EUPEC IGBT Infineon minsk17@tut.by



## K 0.05 F / K 0.05.7 F — G = 9 kg

for discs Ø 50, 60, 57, 75mm

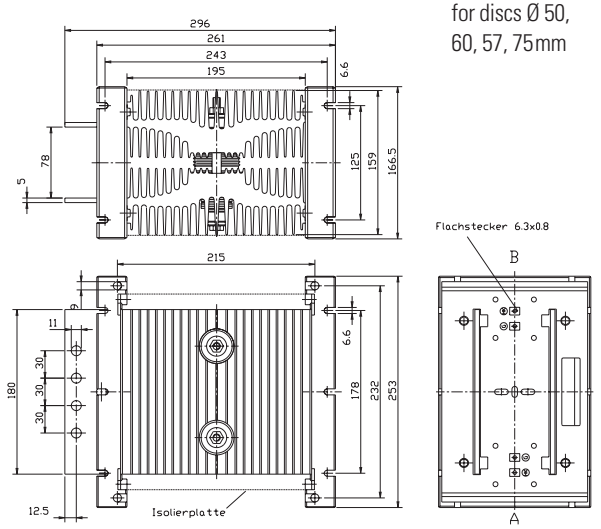


## K 0.12 F — G = 2,5 kg

for discs Ø 41, 50, 60mm

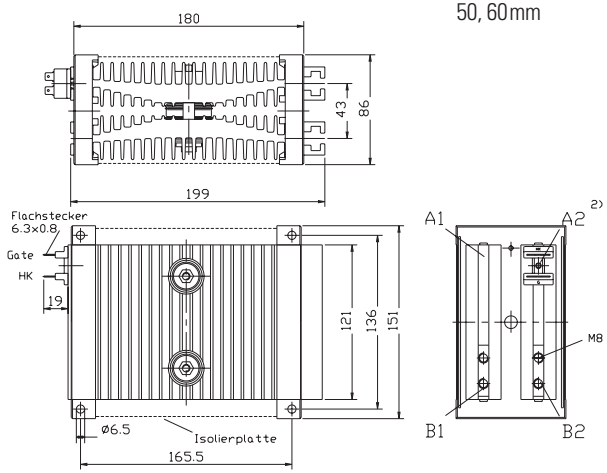


## KK 32 — G = 1 kg

for discs Ø 41, 50mm

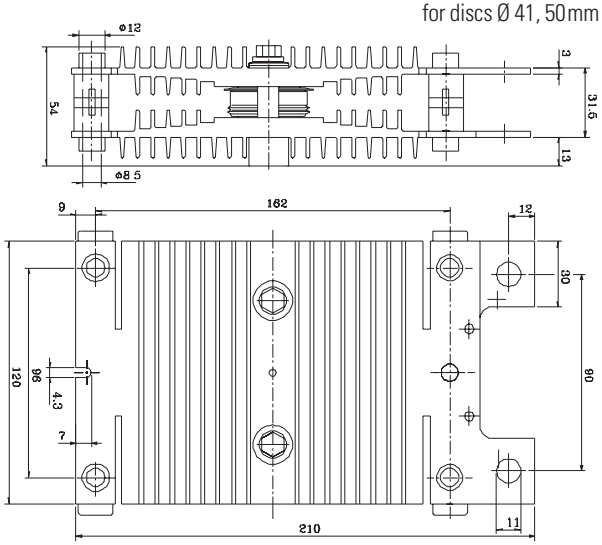


## K 0.08 F/K 0.08.7 F/K 0.08.8 F — G = 9 kg

for discs Ø 50, 60, 57, 75mm

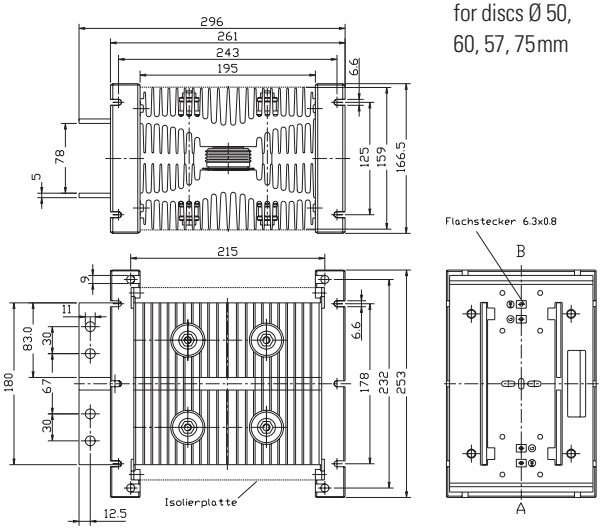


## K 0.22 F — G = 3 kg

for discs Ø 41, 50, 60mm

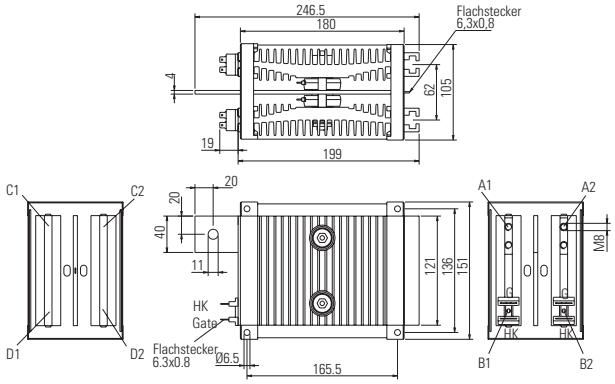


## KK 34 — G = 1,3 kg

for discs Ø 41, 50mm

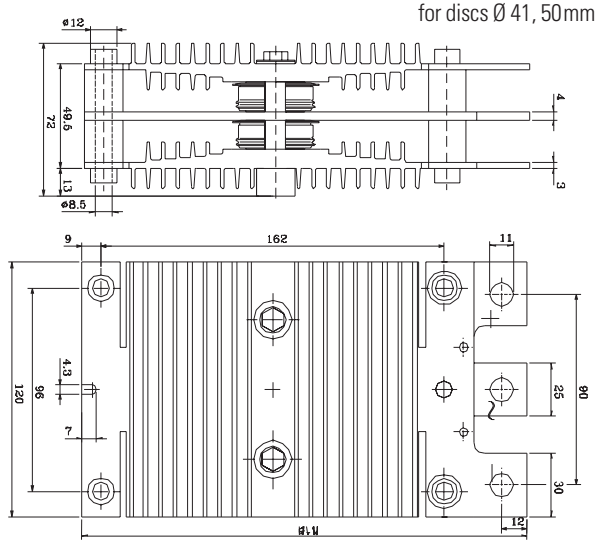


радиодетали электронные компоненты со склада и под заказ

## K 0.17 F — G = 2,5 kg

for discs with housing
T41.14, D41.14,
T50.14, D50.14,
T60.14, D60.14

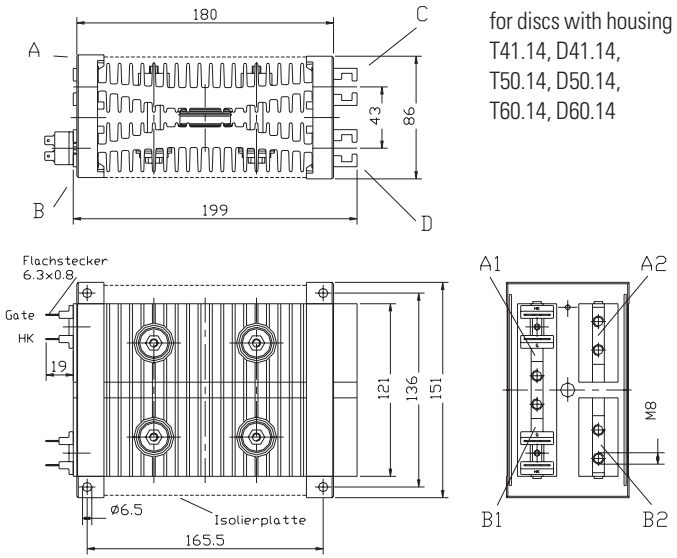


## K 0.65 S — G = 3,3 kg

for discs with housing
T41.14, D41.14,
T50.14, D50.14,
T60.14, D60.14

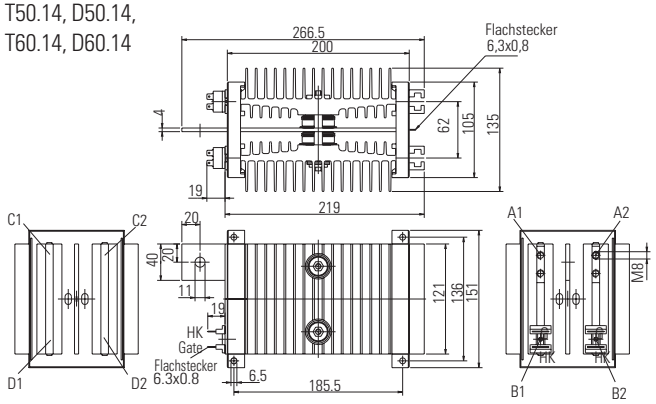


## K 0.36 S — G = 2,9 kg

for discs with housing
T41.14, D41.14,
T50.14, D50.14,
T60.14, D60.14

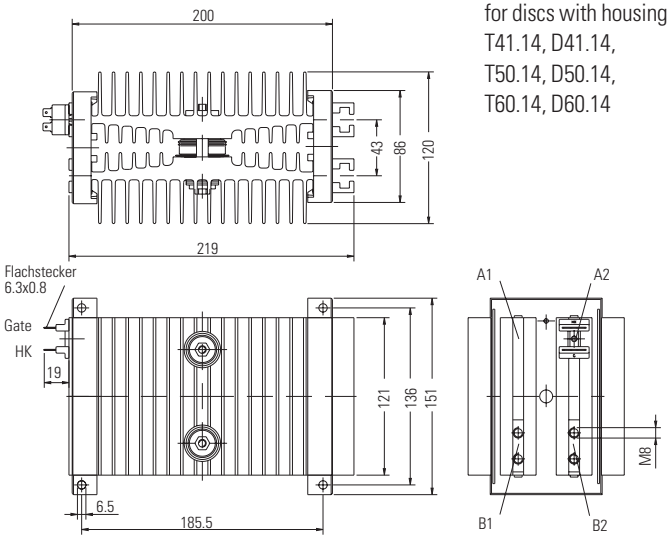


## K 0.048 F — G = 9 kg

for discs Ø 100,
110mm

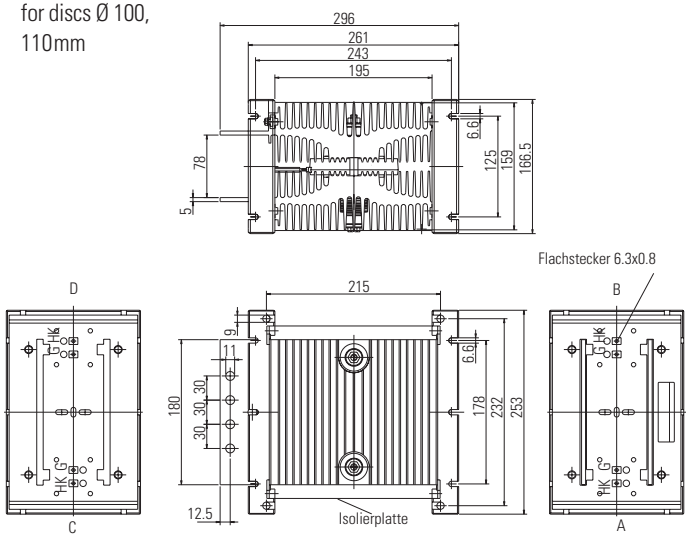

г.Минск тел.8(017)2005646 www.fotorele.net модули EUPEC IGBT Infineon minsk17@tut.by



## KE 01

G = 18,8 kg

for discs with maximum Ø 150 mm

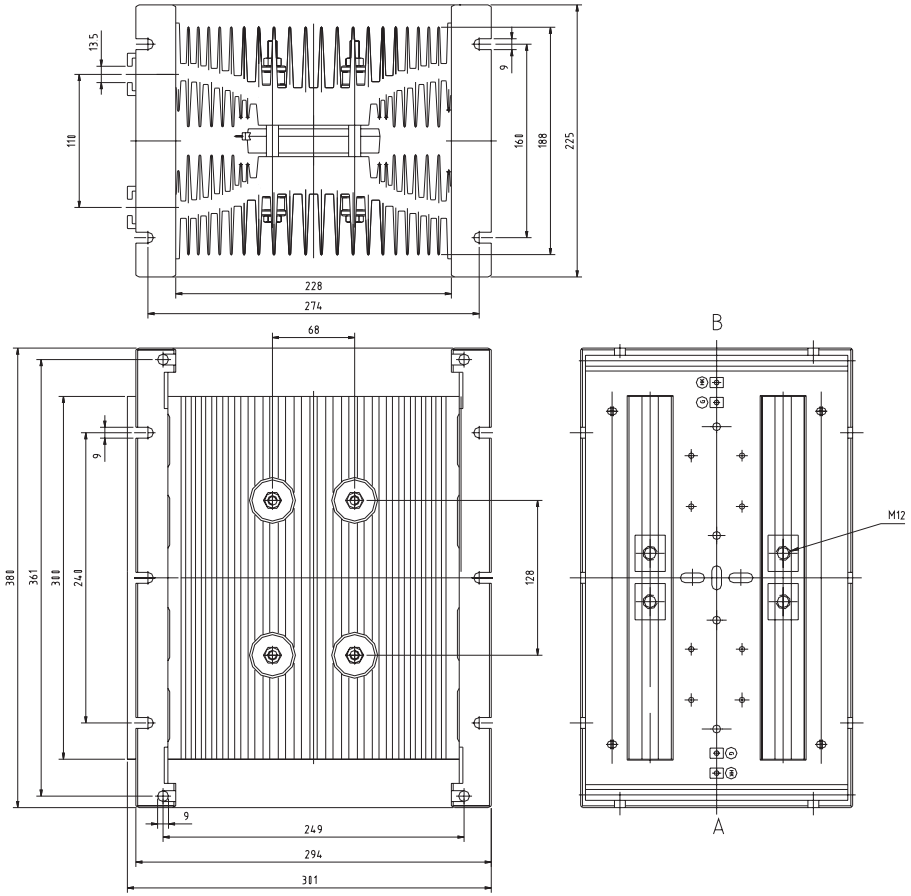


## KE 02

G = 18,5 kg

for discs with maximum Ø 120 mm

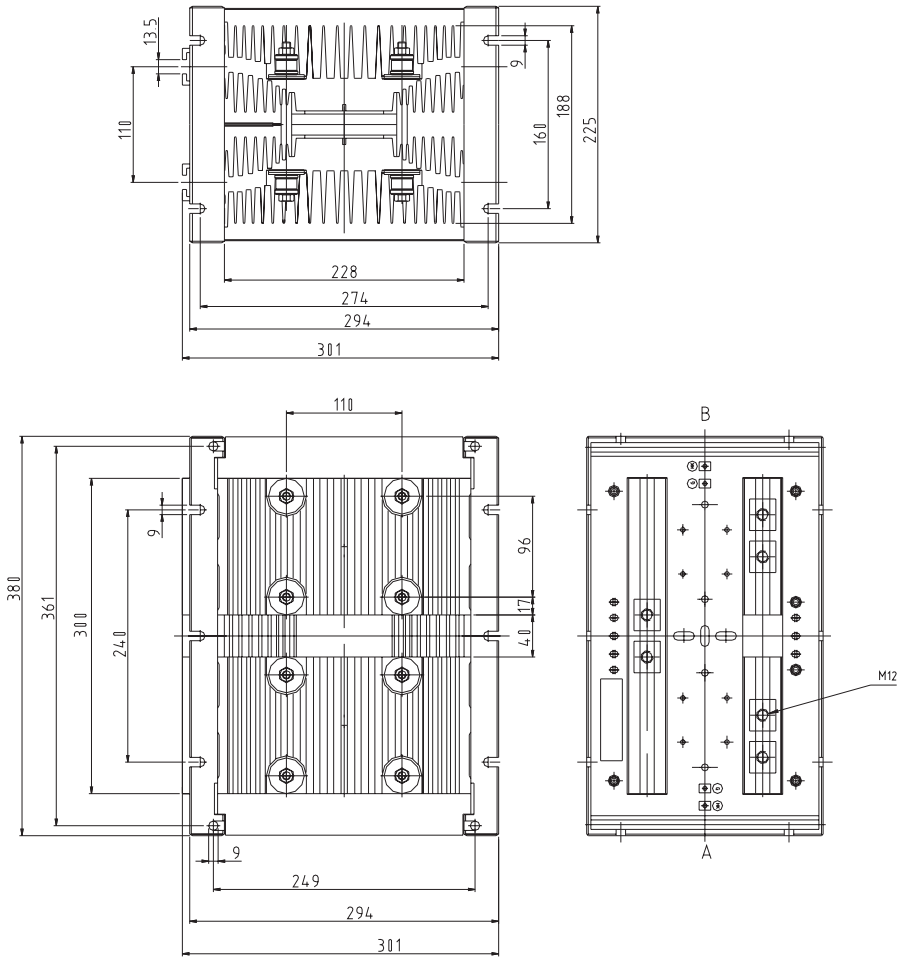


радиодетали электронные компоненты со склада и под заказ

г.Минск тел.8(017)2005646 www.fotorele.net модули EUPEC IGBT Infineon minsk17@tut.by



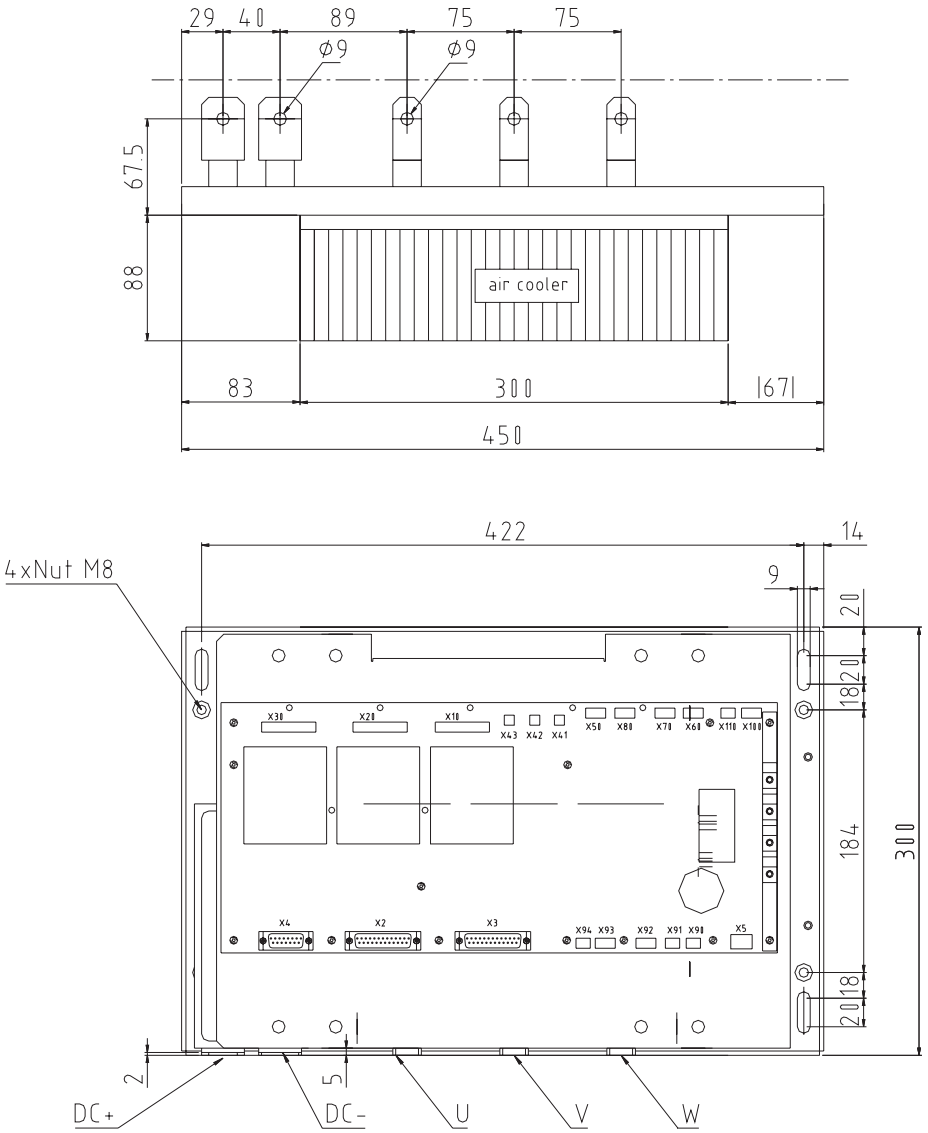


Size: 1

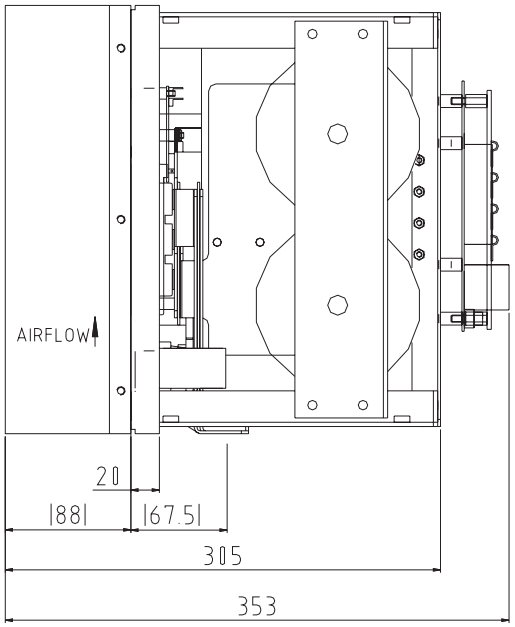




радиодетали электронные компоненты со склада и под заказ

г.Минск тел.8(017)2005646 www.fotorele.net модули EUPEC IGBT Infineon minsk17@tut.by



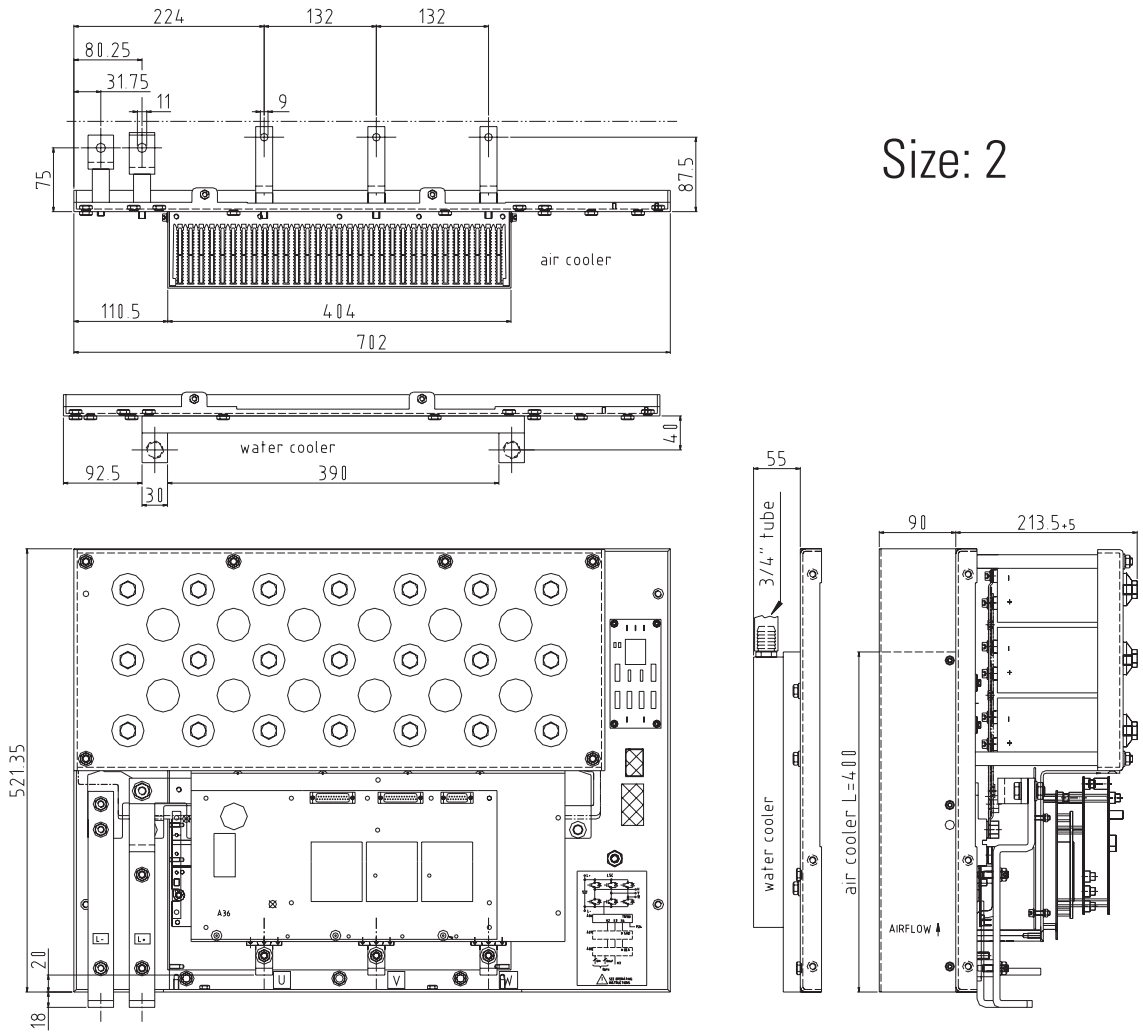


Size: 2

радиодетали электронные компоненты со склада и под заказ

г.Минск тел.8(017)2005646 www.fotorele.net модули EUPEC IGBT Infineon minsk17@tut.by



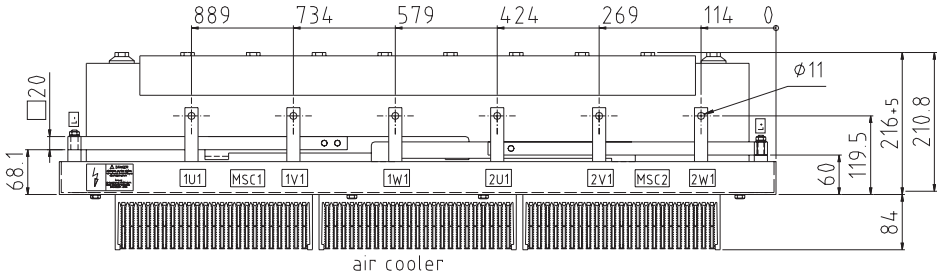


Size: 3

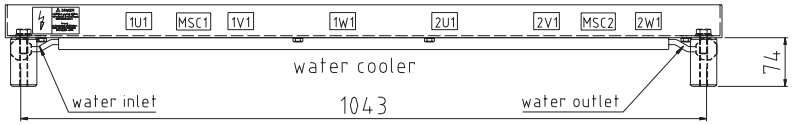


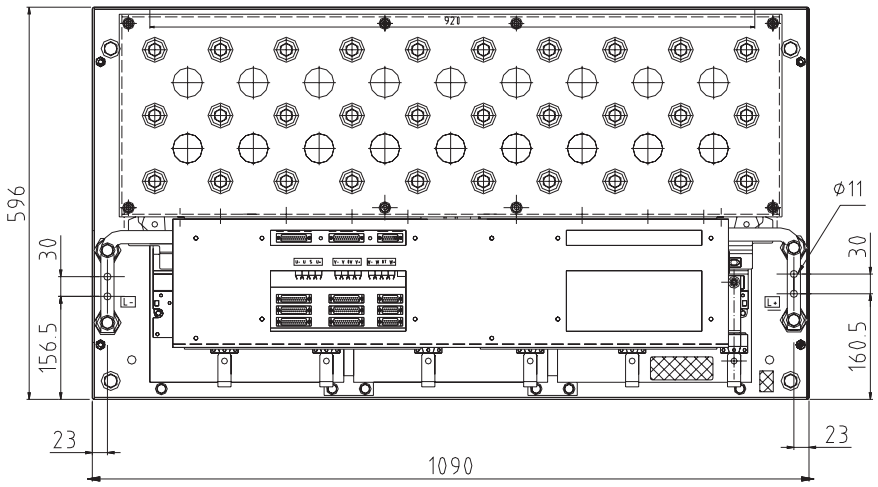


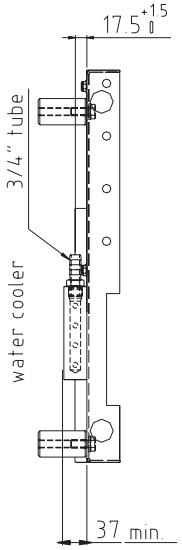


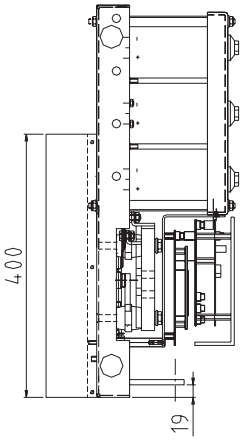




радиодетали электронные компоненты со склада и под заказ

г.Минск тел.8(017)2005646 www.fotorele.net модули EUPEC IGBT Infineon minsk17@tut.by



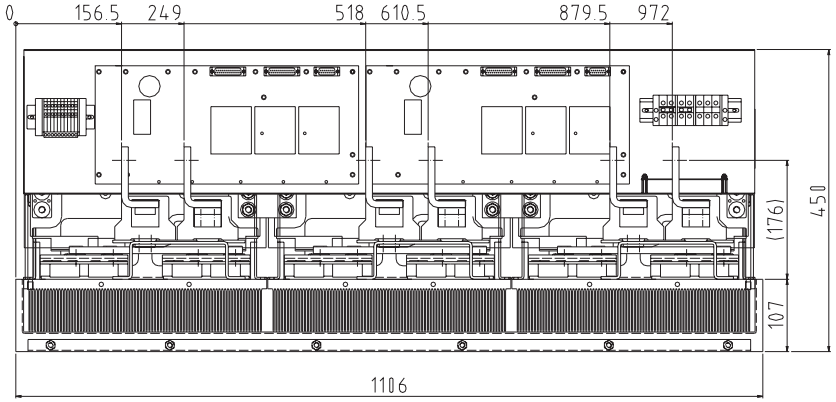


Size: 4

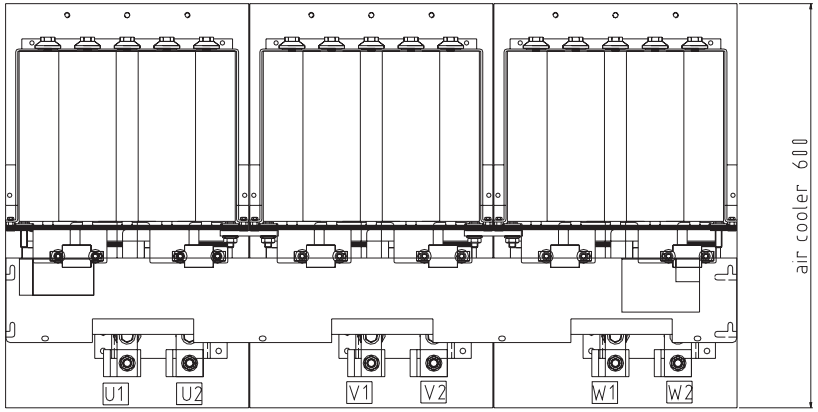


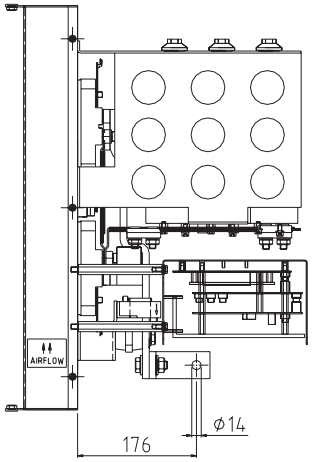


радиодетали электронные компоненты со склада и под заказ

г.Минск тел.8(017)2005646 www.fotorele.net модули EUPEC IGBT Infineon minsk17@tut.by



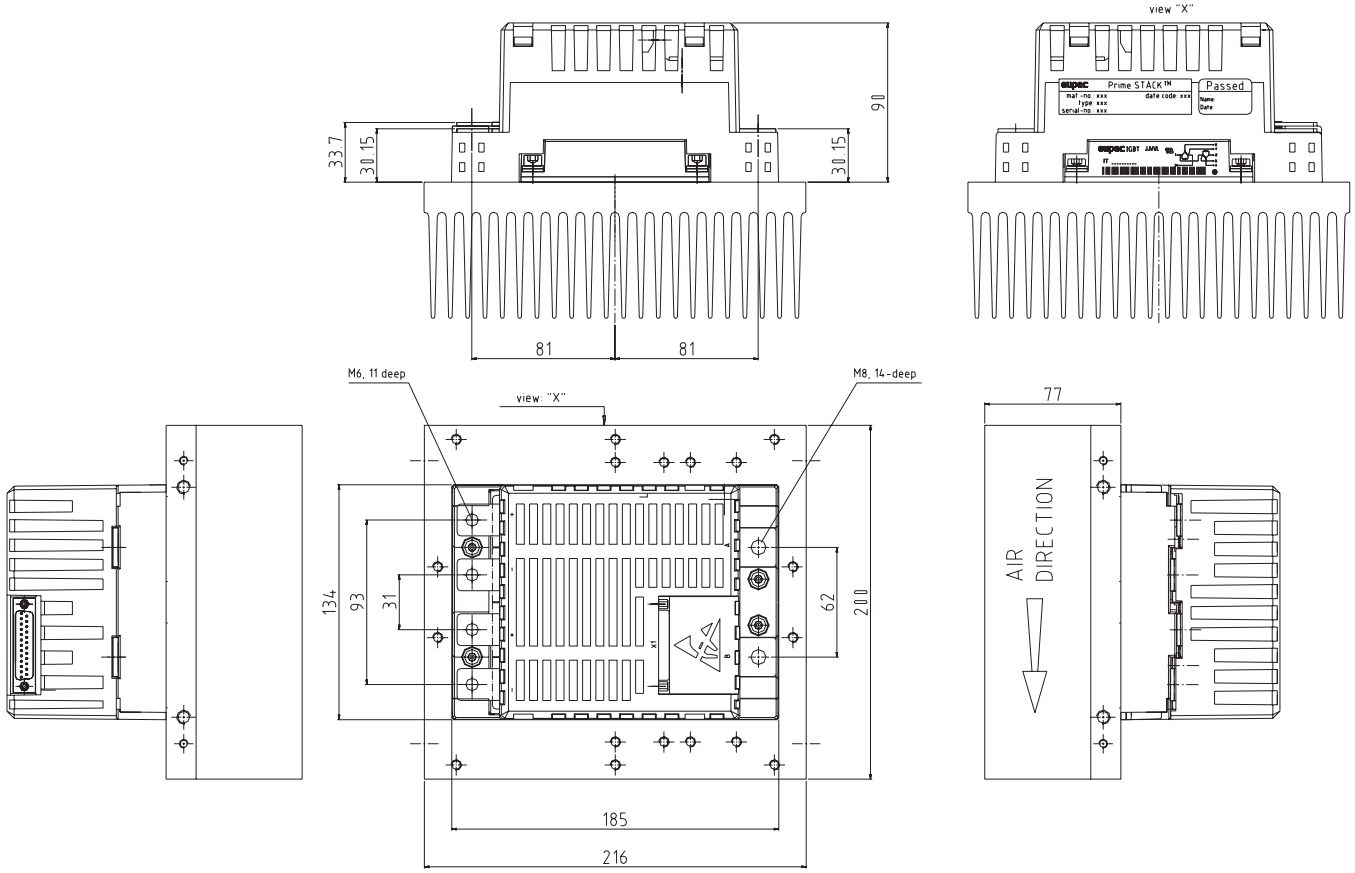




радиодетали электронные компоненты со склада и под заказ

г.Минск тел.8(017)2005646 www.fotorele.net модули EUPEC IGBT Infineon minsk17@tut.by



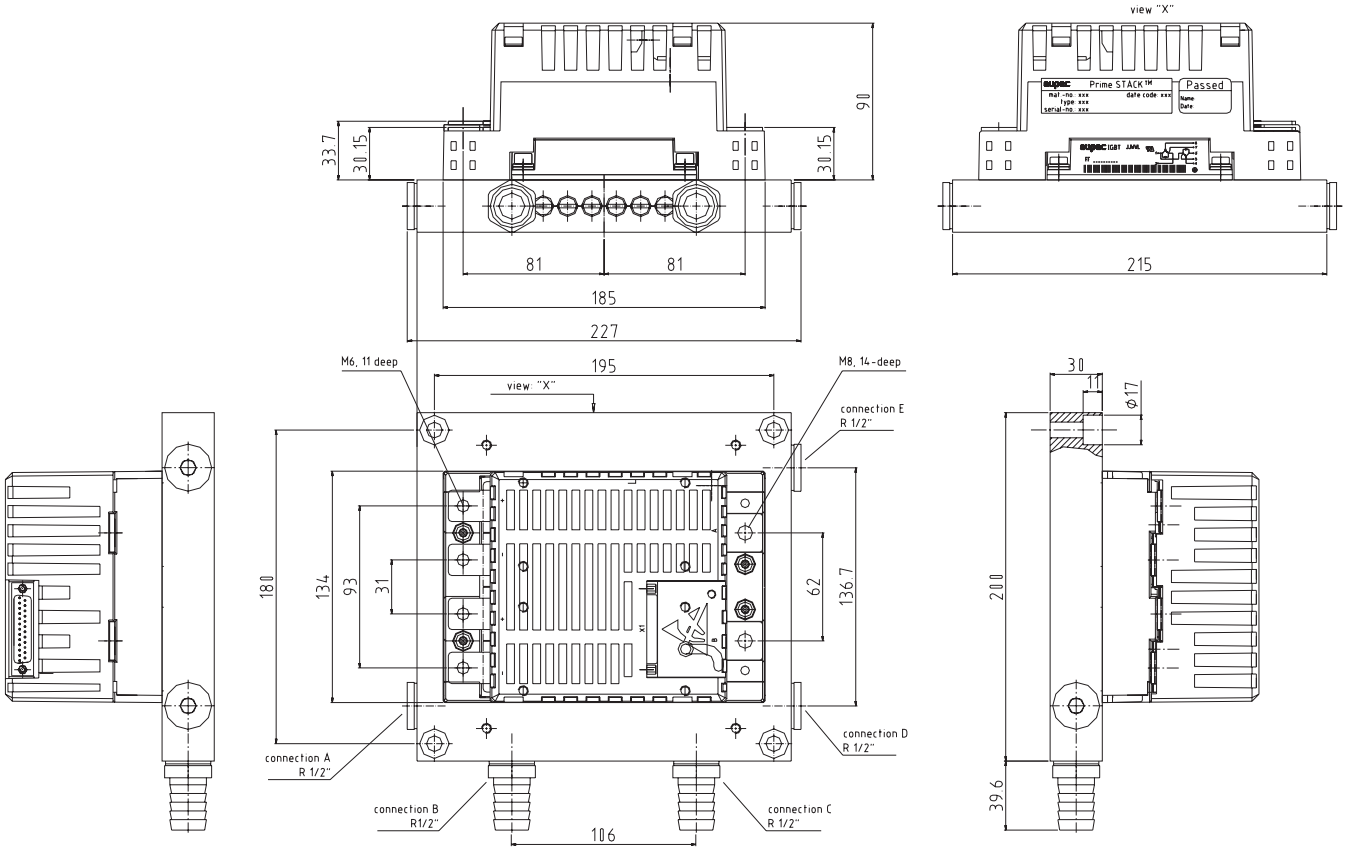


радиодетали электронные компоненты со склада и под заказ

г.Минск тел.8(017)2005646 www.fotorele.net модули EUPEC IGBT Infineon minsk17@tut.by



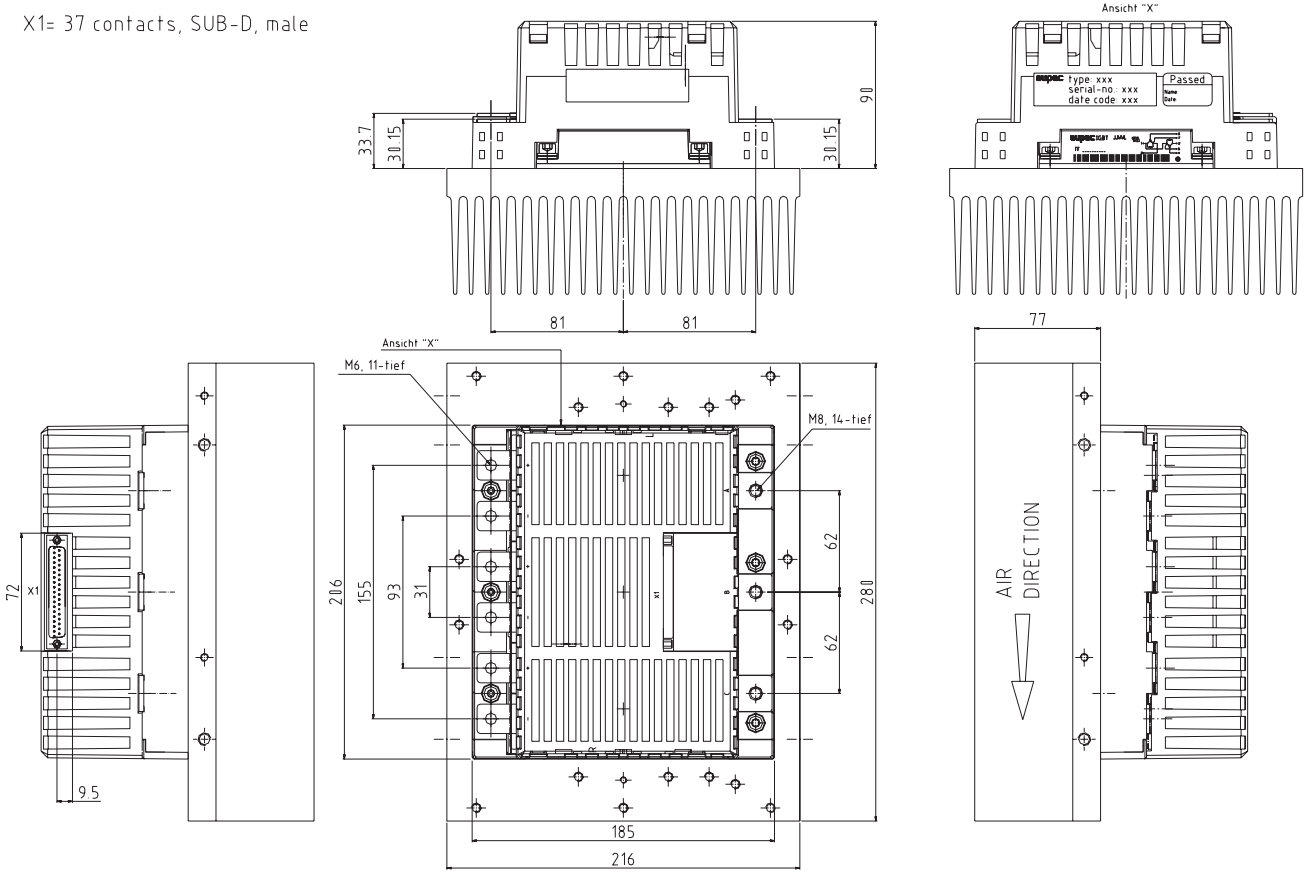




радиодетали электронные компоненты со склада и под заказ

г.Минск тел.8(017)2005646 www.fotorele.net модули EUPEC IGBT Infineon minsk17@tut.by



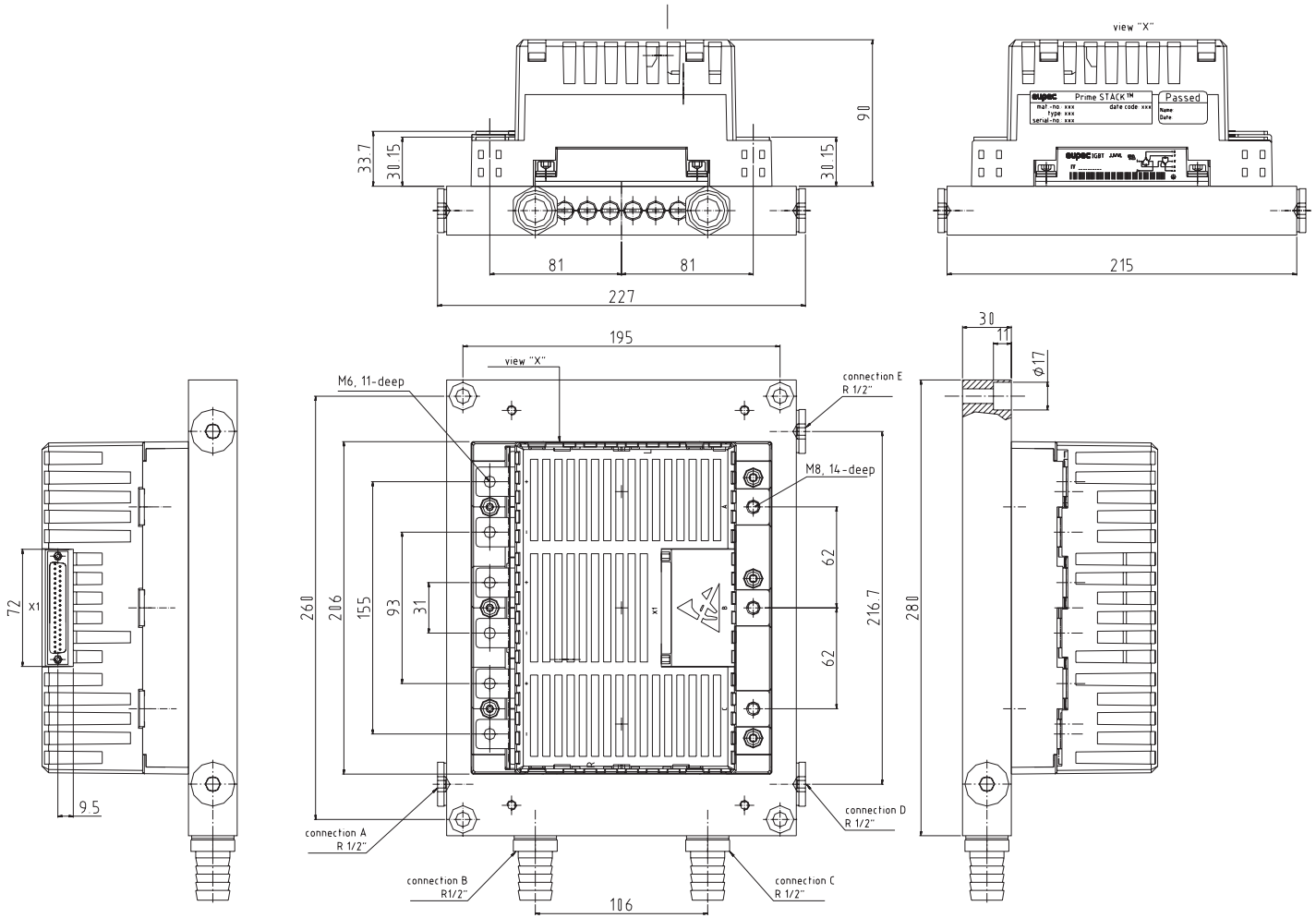


радиодетали электронные компоненты со склада и под заказ

г.Минск тел.8(017)2005646 www.fotorele.net модули EUPEC IGBT Infineon minsk17@tut.by



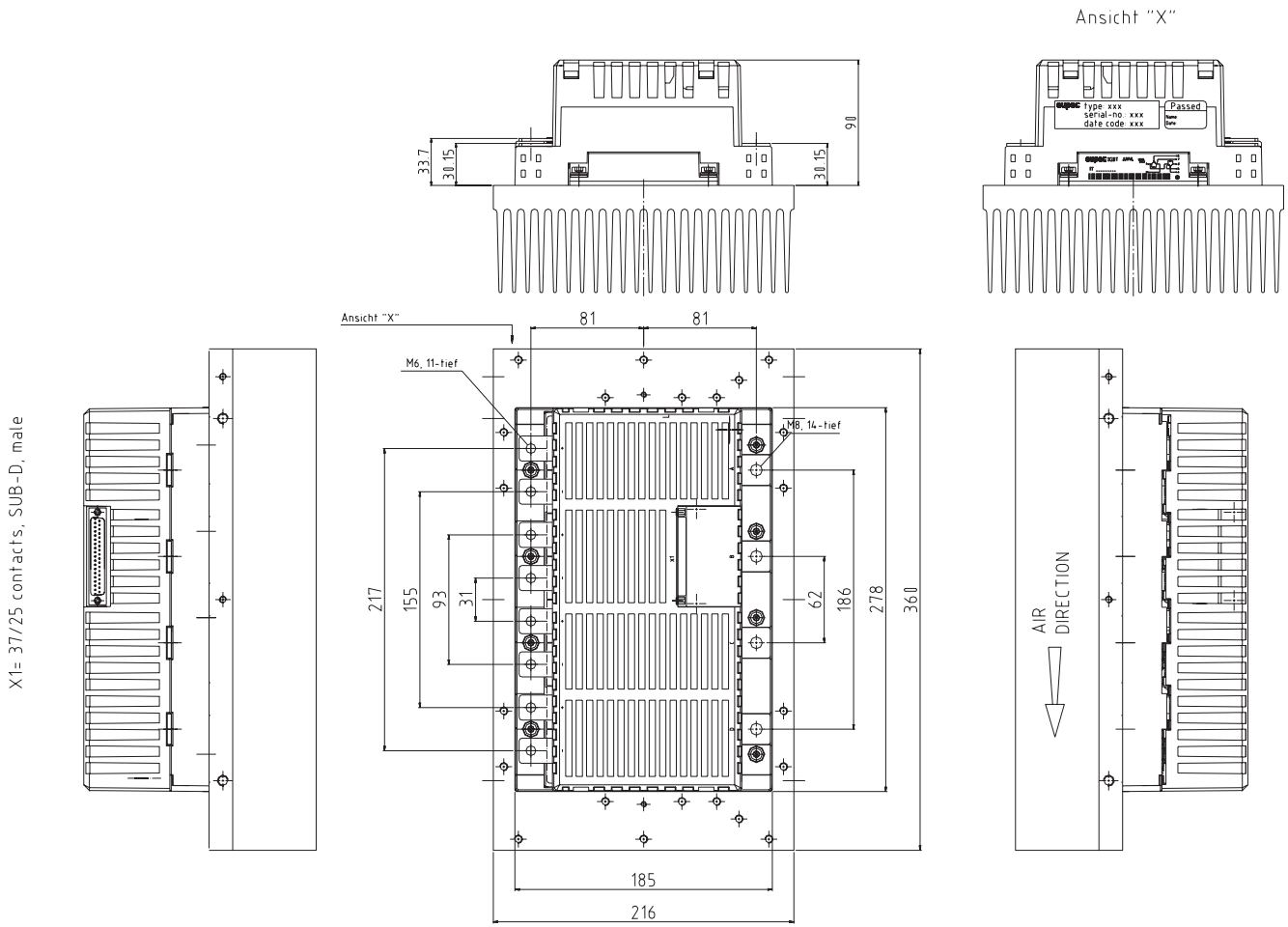




радиодетали электронные компоненты со склада и под заказ

г.Минск тел.8(017)2005646 www.fotorele.net модули EUPEC IGBT Infineon minsk17@tut.by



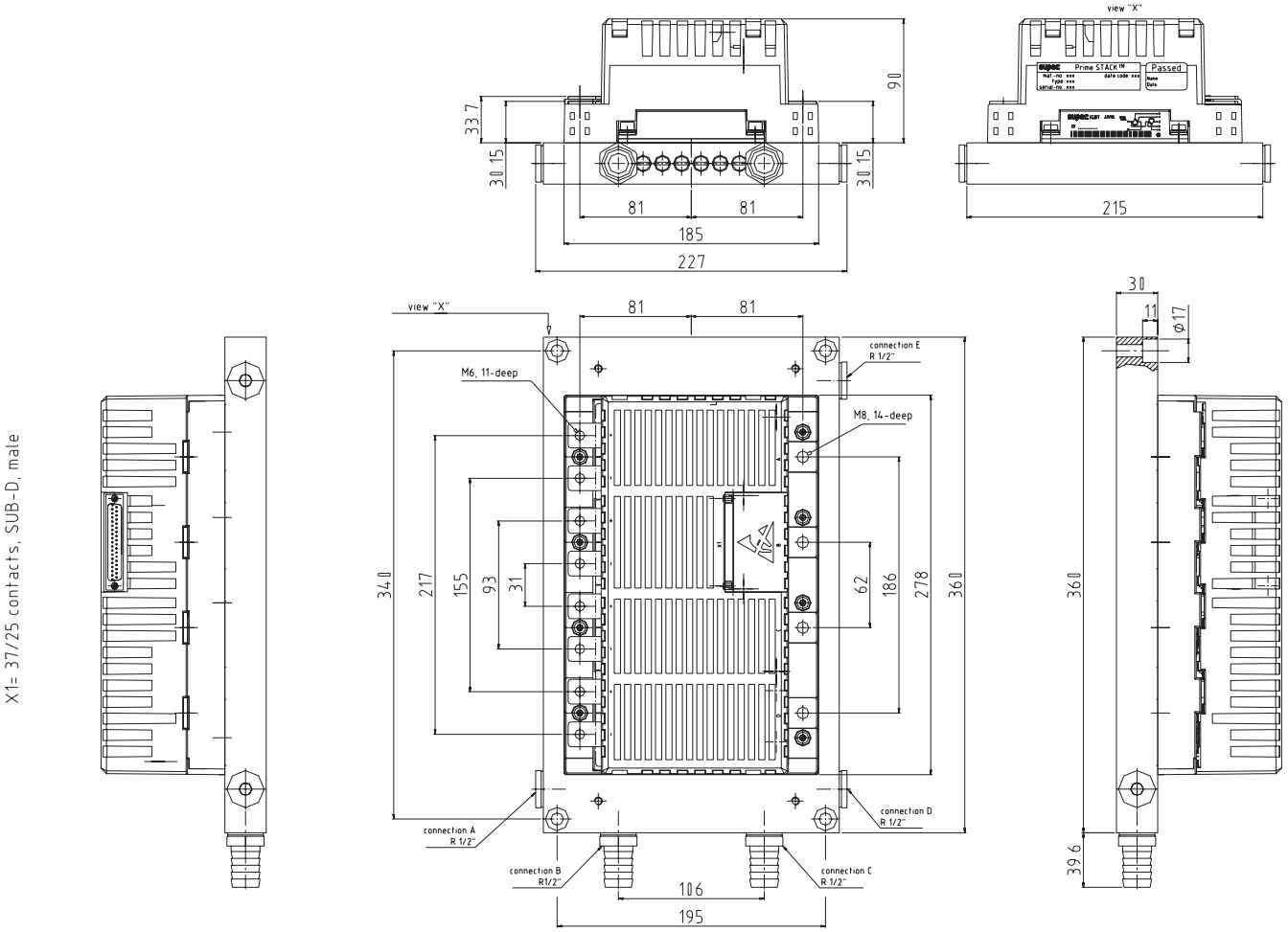


радиодетали электронные компоненты со склада и под заказ

## EasyPIM™750 L_750a

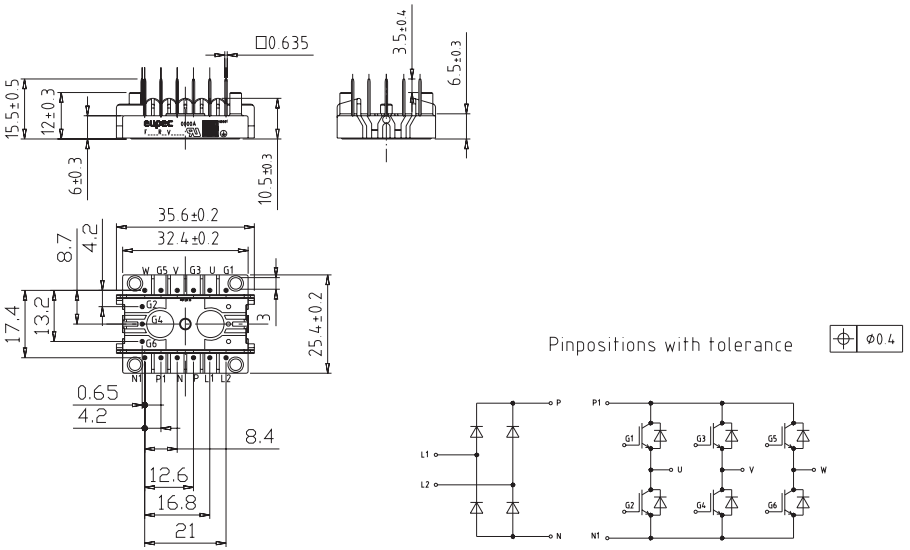


## EasyPACK750 L_750b

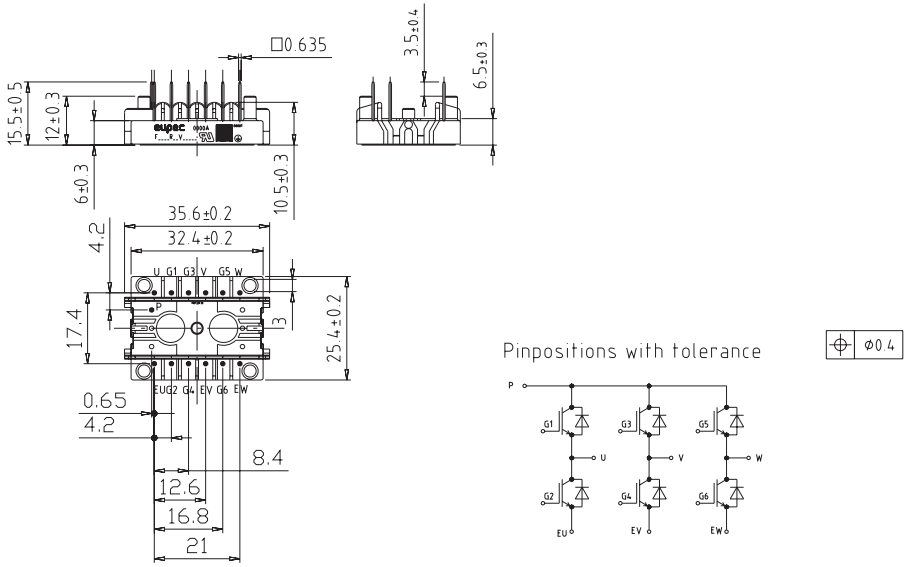


## EasyPACK750 L_750c

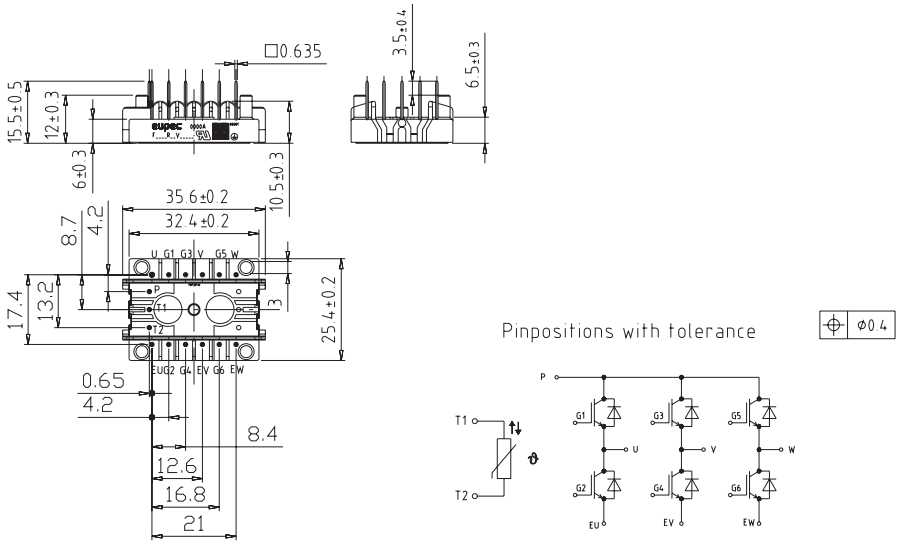


## EasyPACK750 L_750f

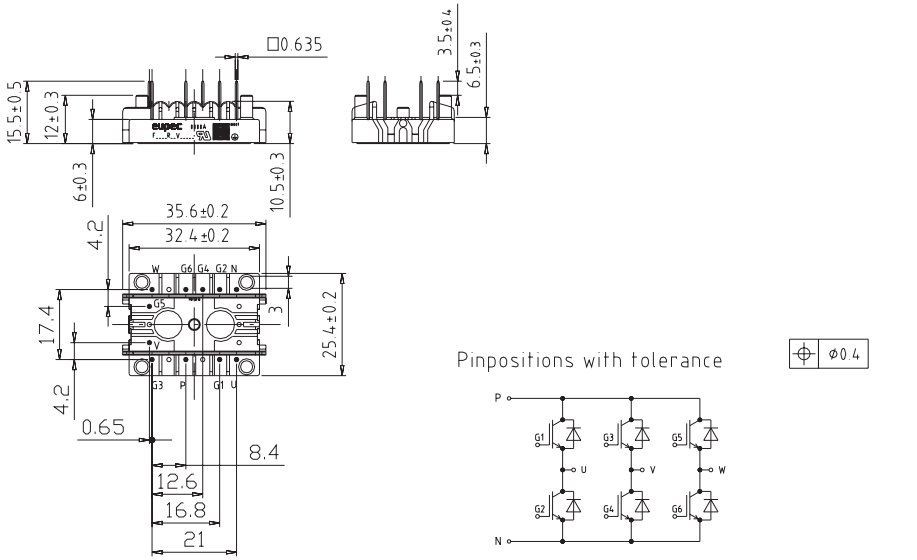

г.Минск тел.8(017)2005646 www.fotorele.net модули EUPEC IGBT Infineon minsk17@tut.by



## EasyPIM™1 L_1a

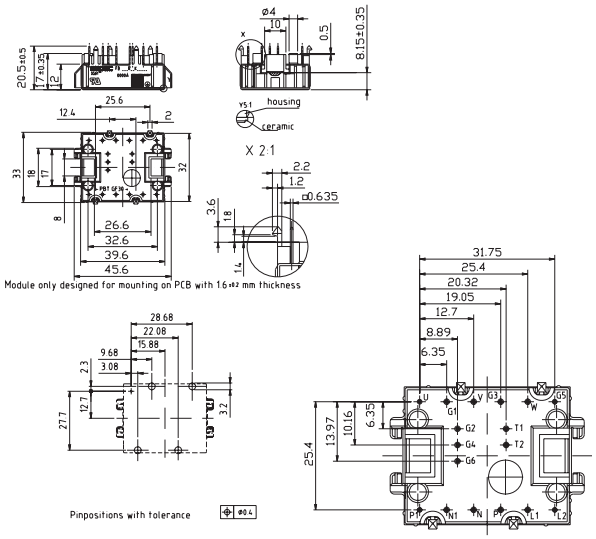


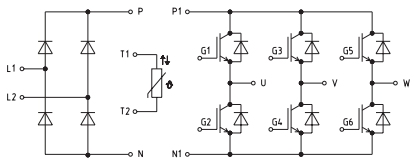


## EasyPACK1 L_1b

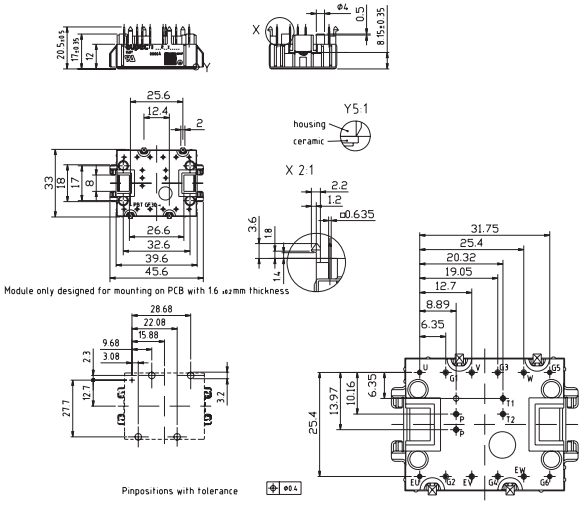


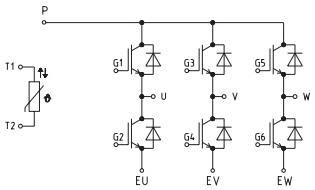


радиодетали электронные компоненты со склада и под заказ

## EasyPIM™2 L_2a

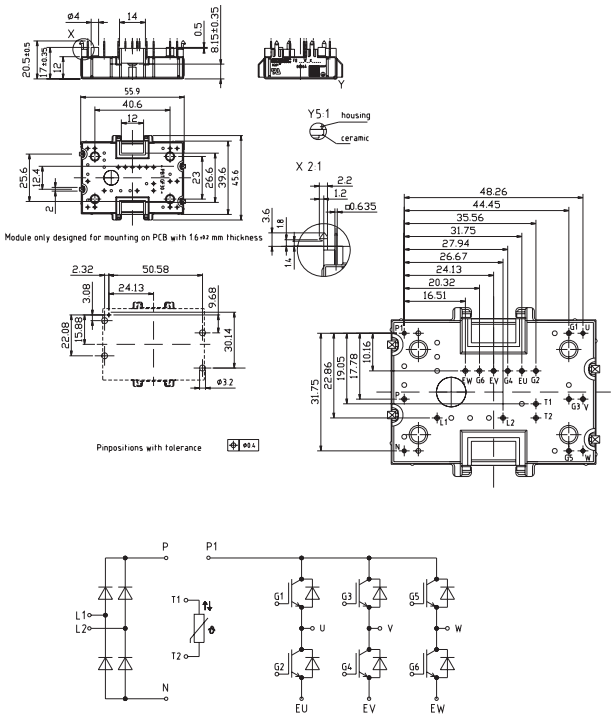


## EasyPIM™2 L_2b

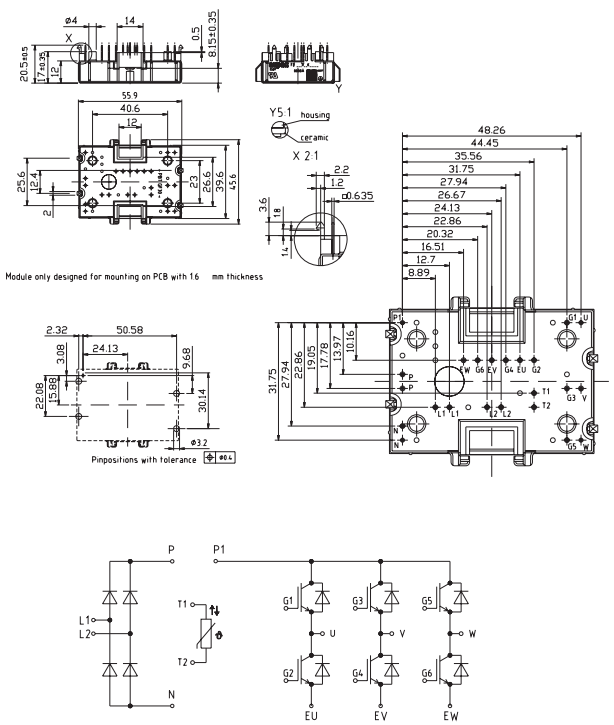


## EasyPIM™2 L_2c

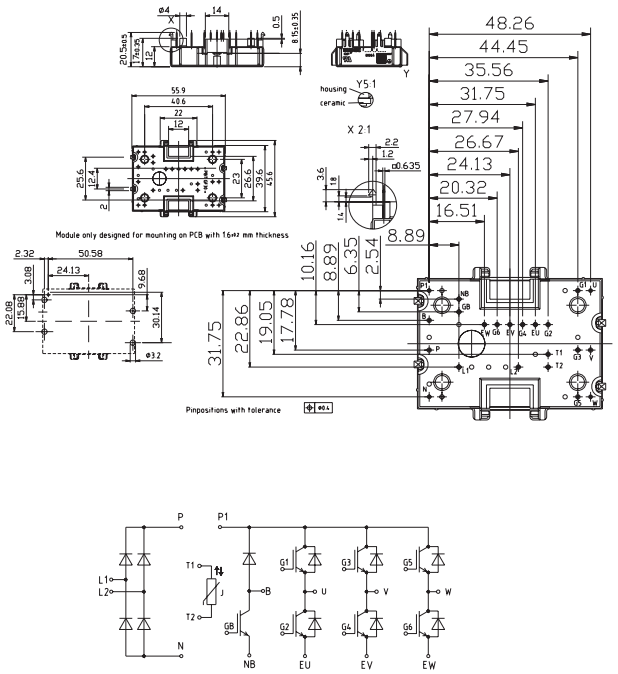




радиодетали электронные компоненты со склада и под заказ

г.Минск тел.8(017)2005646 www.fotorele.net модули EUPEC IGBT Infineon minsk17@tut.by



## EasyPIM™2 L_2d

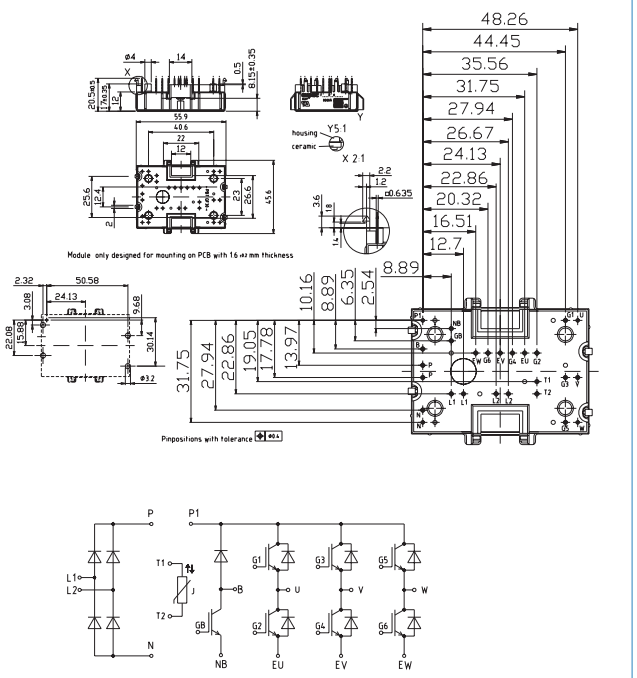


## EasyPIM™2 L_2e

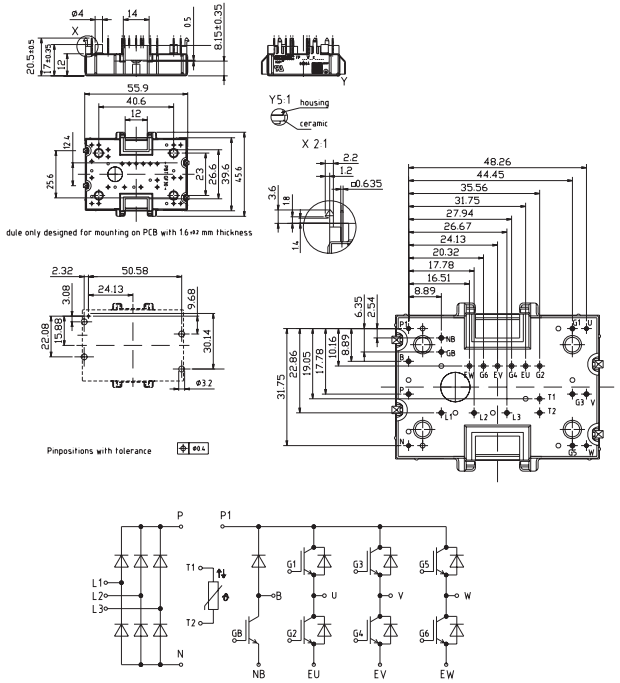


## EasyPIM™2 L_2f

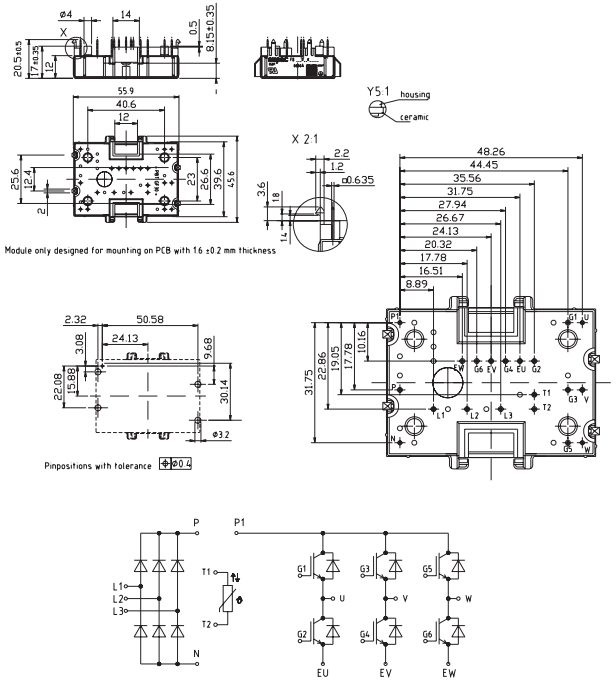


радиодетали электронные компоненты со склада и под заказ

## EasyPACK2 L_2g

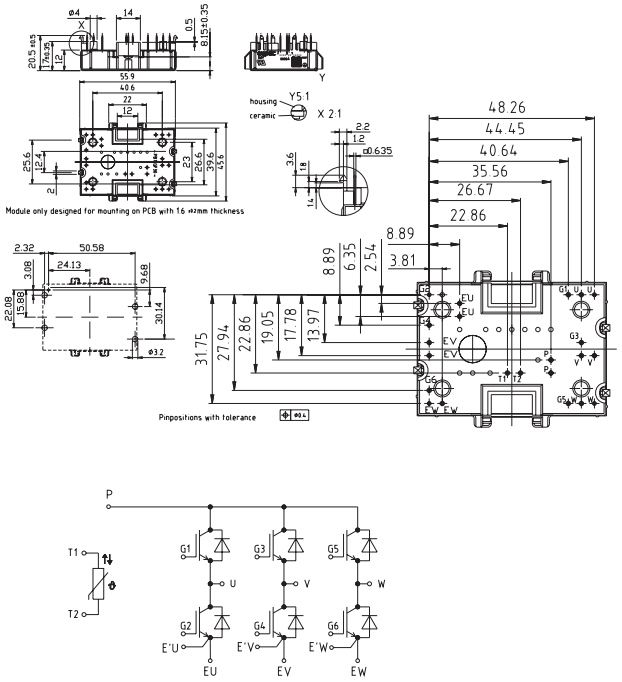


## EasyPACK2 L_2h

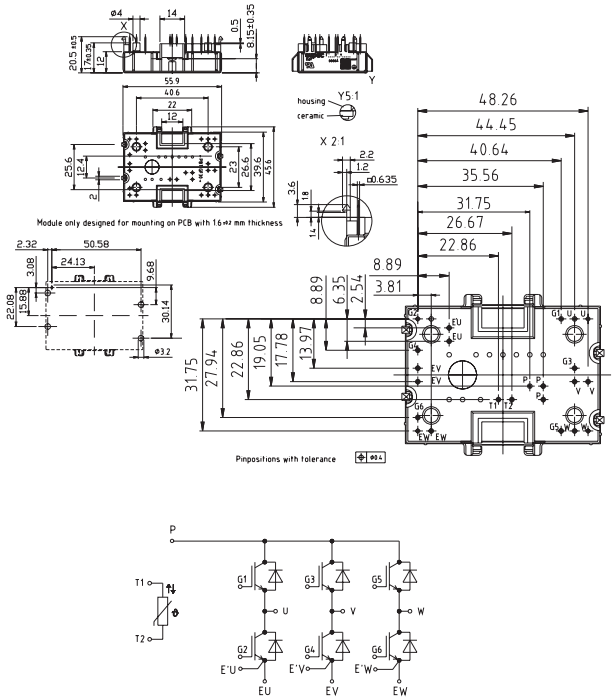


## EasyPACK2 L_2j

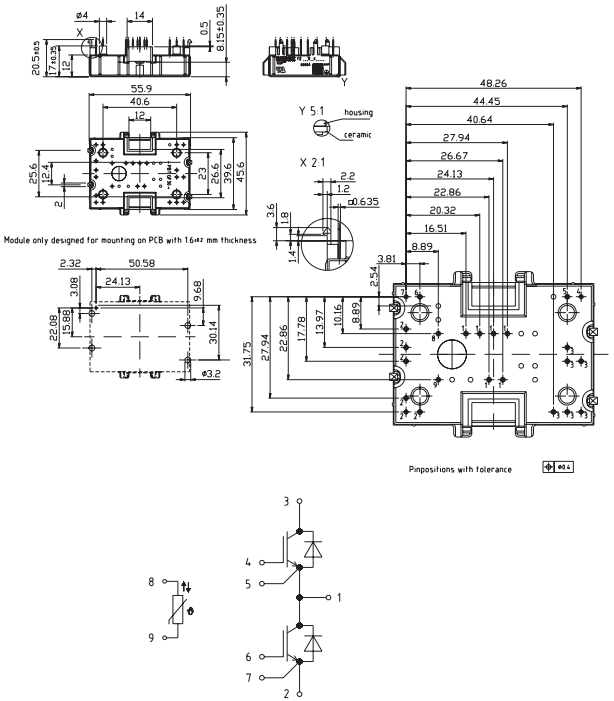

г.Минск тел.8(017)2005646 www.fotorele.net модули EUPEC IGBT Infineon minsk17@tut.by



## EconoPIM™1 — M_E1a

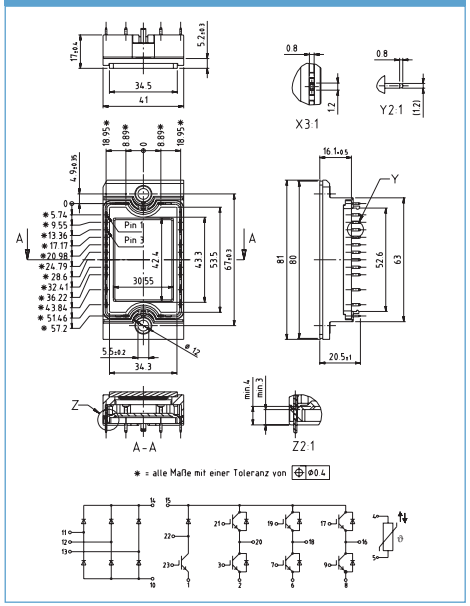


## EconoPIM™2 — M_E2a

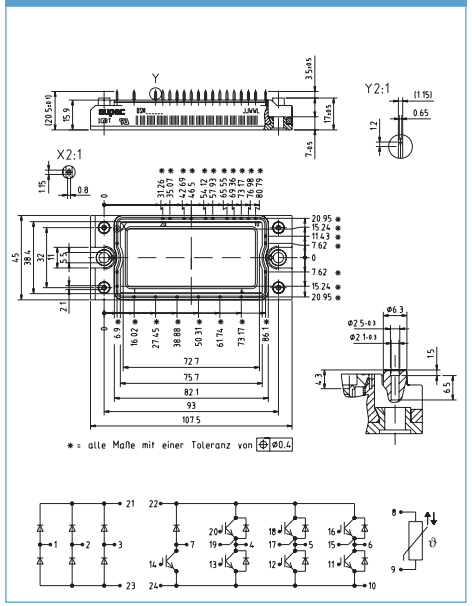


## EconoPIM™3 — M_E3a

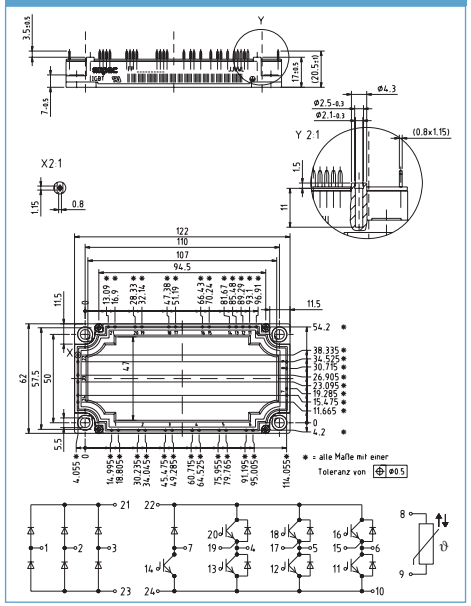


## EconoPACK™1 B — M_E1b

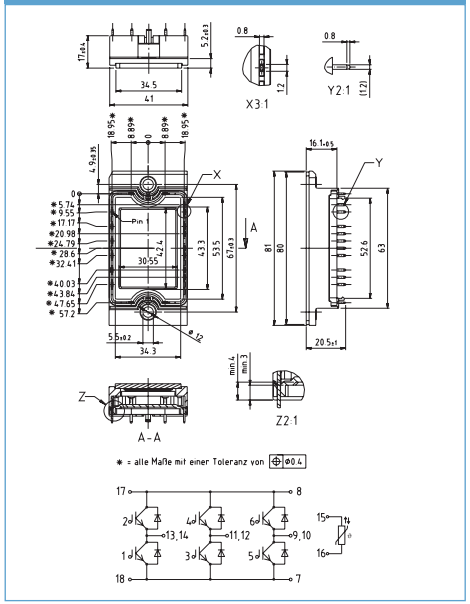


## EconoPACK™2 B — M_E2b

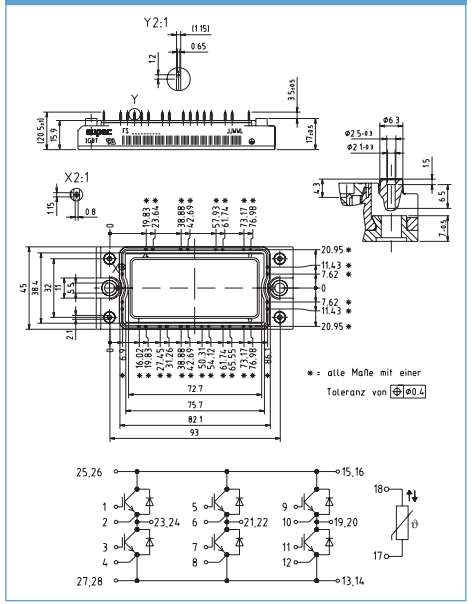


## EconoPACK™3 B — M_E3b

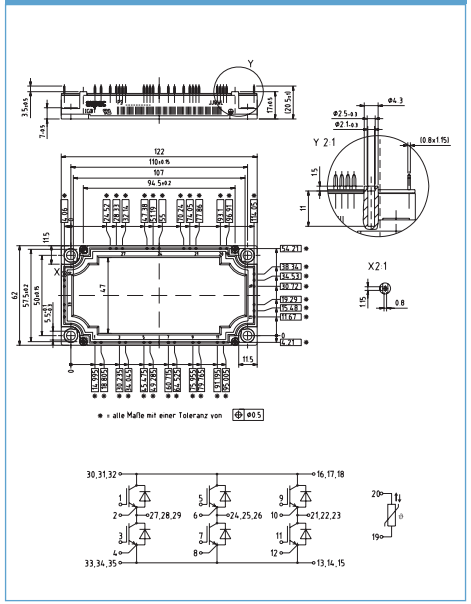


радиодетали электронные компоненты со склада и под заказ

## EconoPACK™ 1B FourPACK — M_E1c

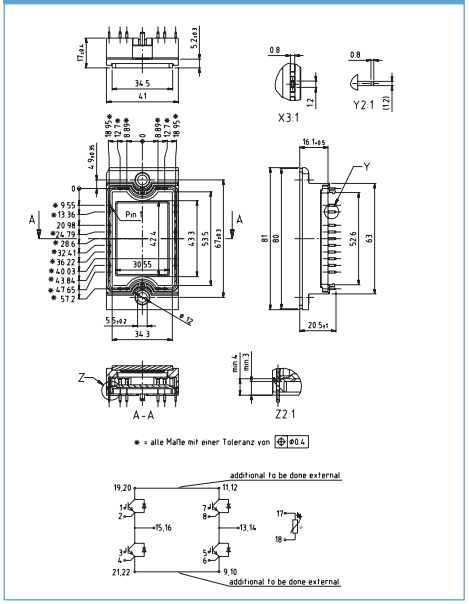


## EconoPACK™2 A (shortpin) — M_E2c

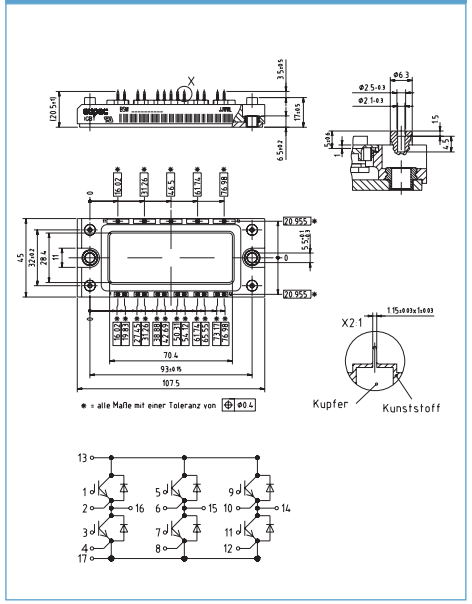


## EconoPACK™3 A — M_E3c

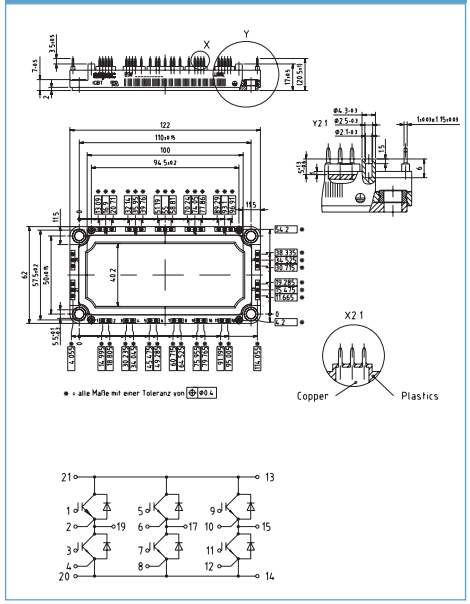


## EconoPACK™2 A (longpin) — M_E2d

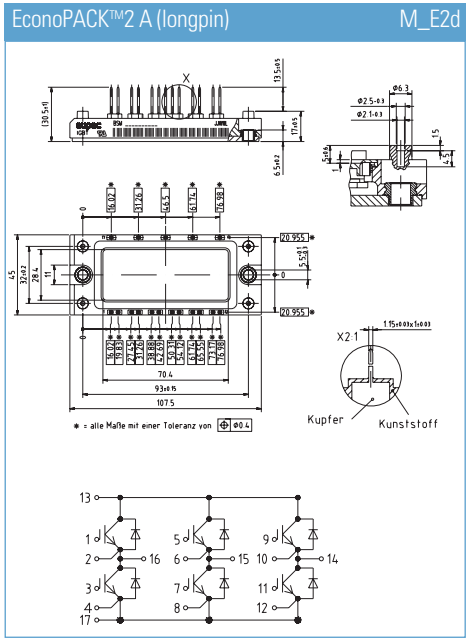


## EconoPACK™2 B FourPACK — M_E2e

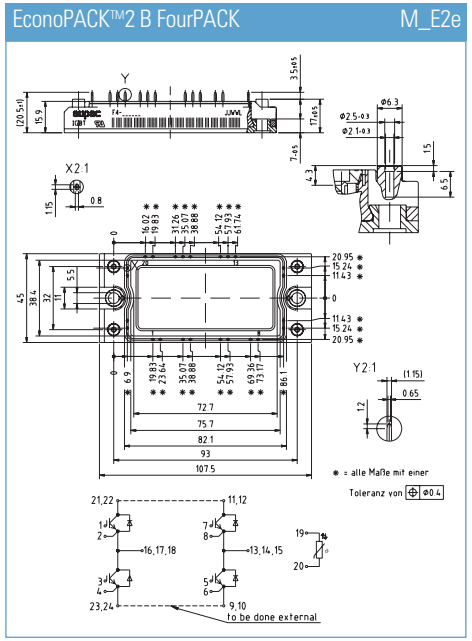


## EconoPACK™3 B FourPACK — M_E3d

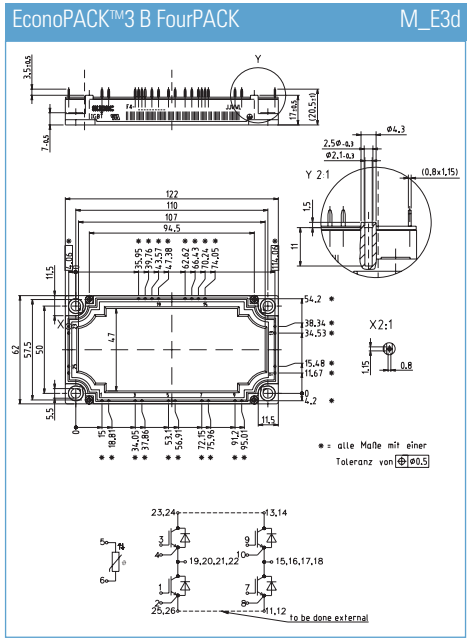

г.Минск тел.8(017)2005646 www.fotorele.net модули EUPEC IGBT Infineon minsk17@tut.by



## EconoPACK™3 A SR-Drives Modul — M_E3e

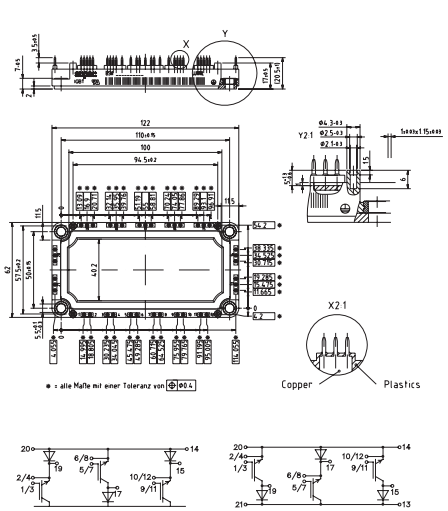


## EconoPACK™3 A TriPACK — M_E3f

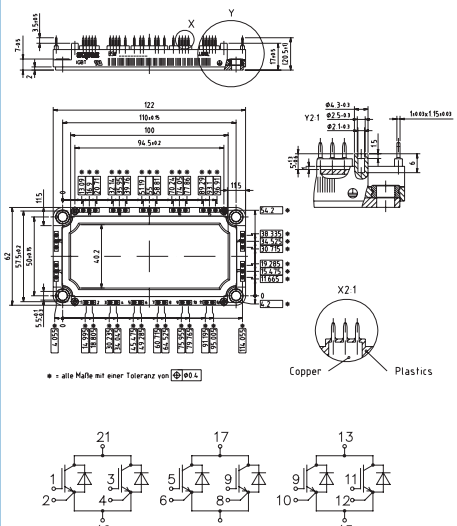


## EconoPACK™ Shunt (Full Bridges) — M_E3g

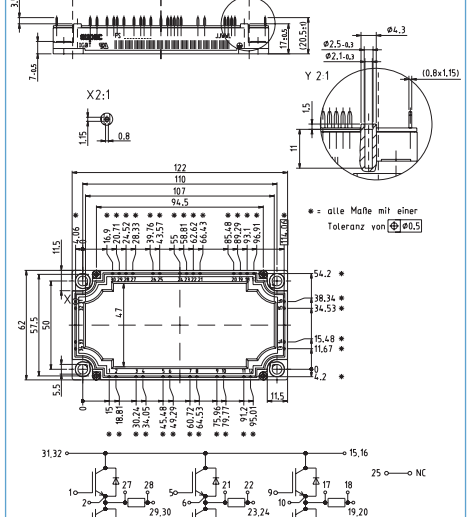


## EconoPACK™ Shunt (TriPACK-High) — M_E3h

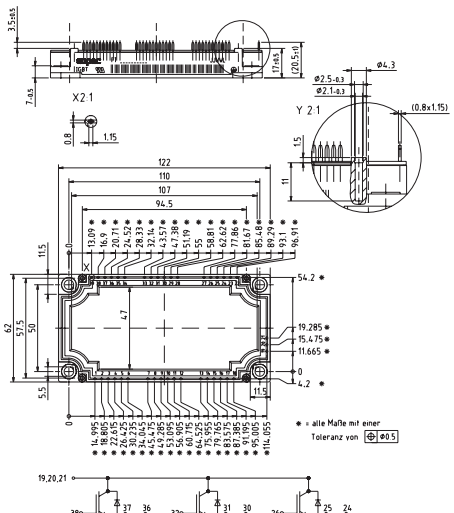


## EconoPACK™ Shunt (TriPACK-Low) — M_E2f

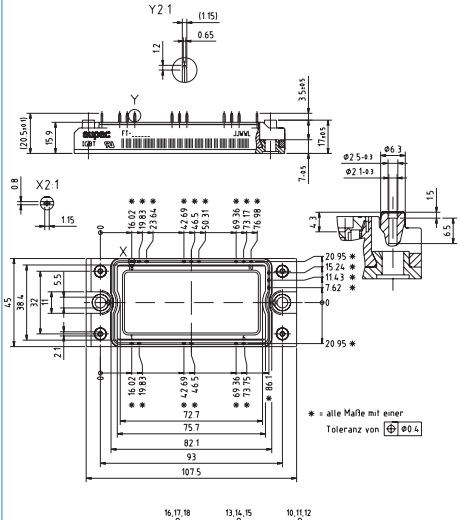


## EconoPACK™ 2 B — M_E2g

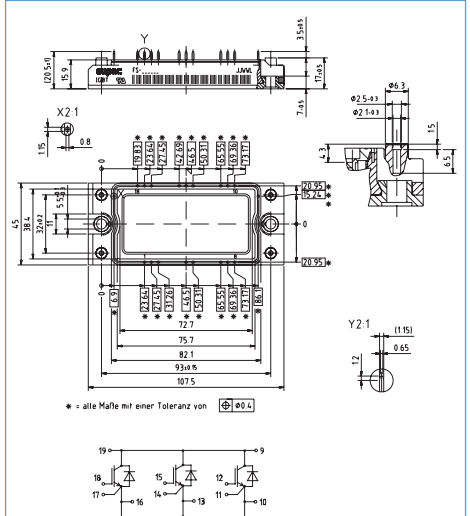


радиодетали электронные компоненты со склада и под заказ

## 34 mm Module M_34a

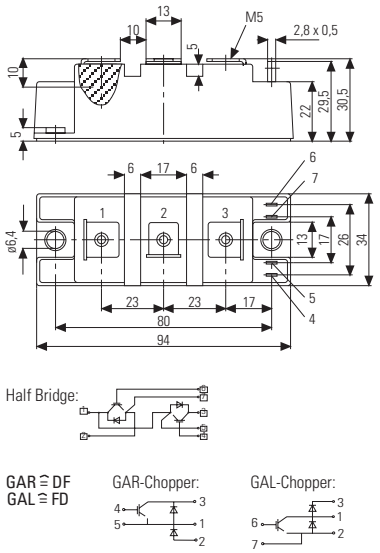


## 62 mm Module M_62a

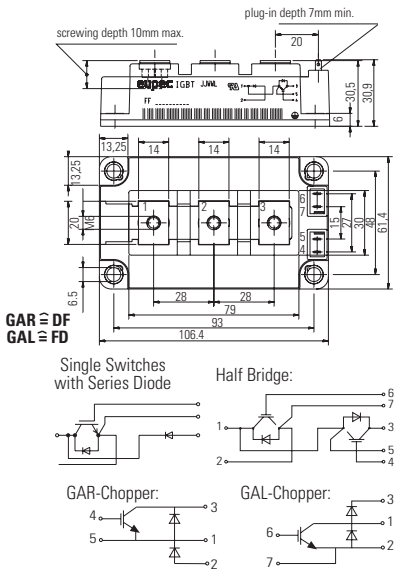


## Single Switch 62 M_62b

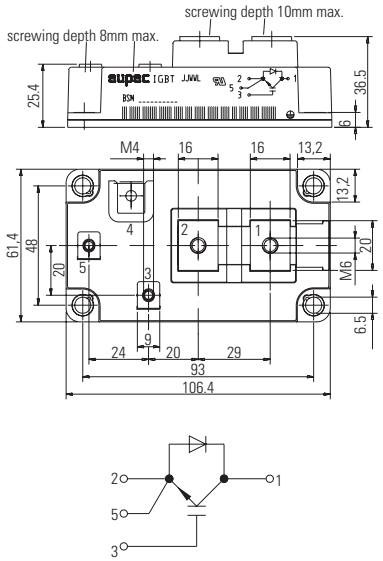


## Single Switch 62, collector sense M_62c

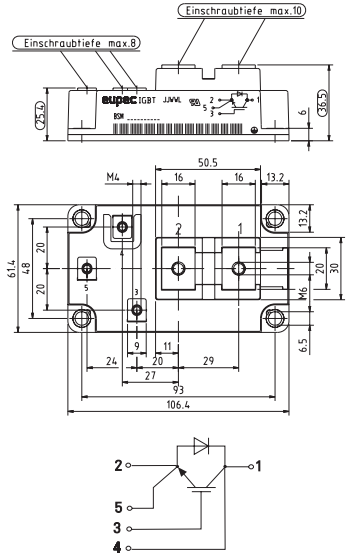


## Single Diode 62 M_62d

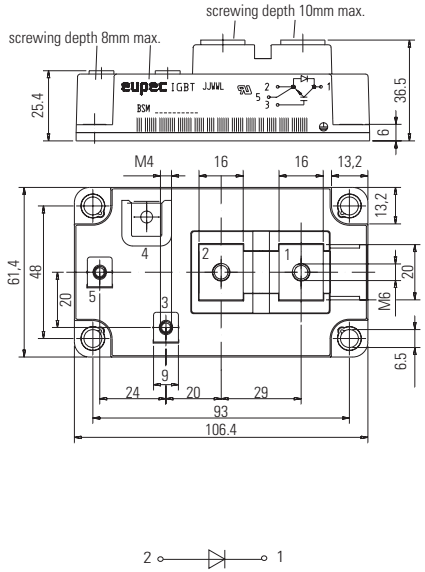


## Dual Diode 62 M_62e

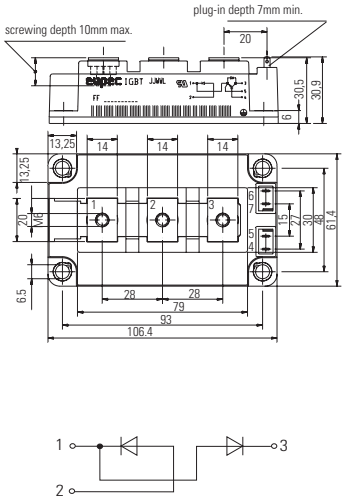

г.Минск тел.8(017)2005646 www.fotorele.net модули EUPEC IGBT Infineon minsk17@tut.by



## EconoPACK™+ M_E+a

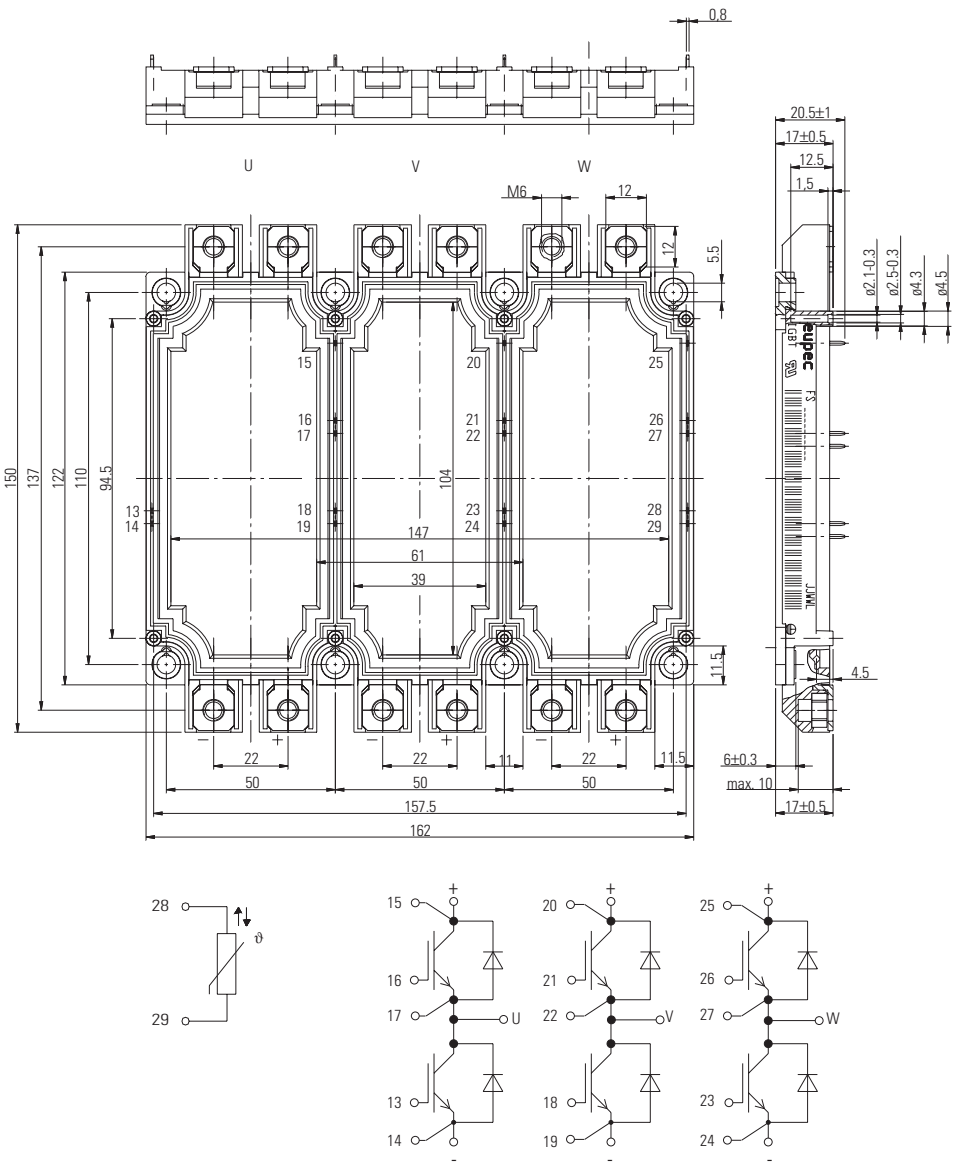


## EconoDUAL™+ M_ED

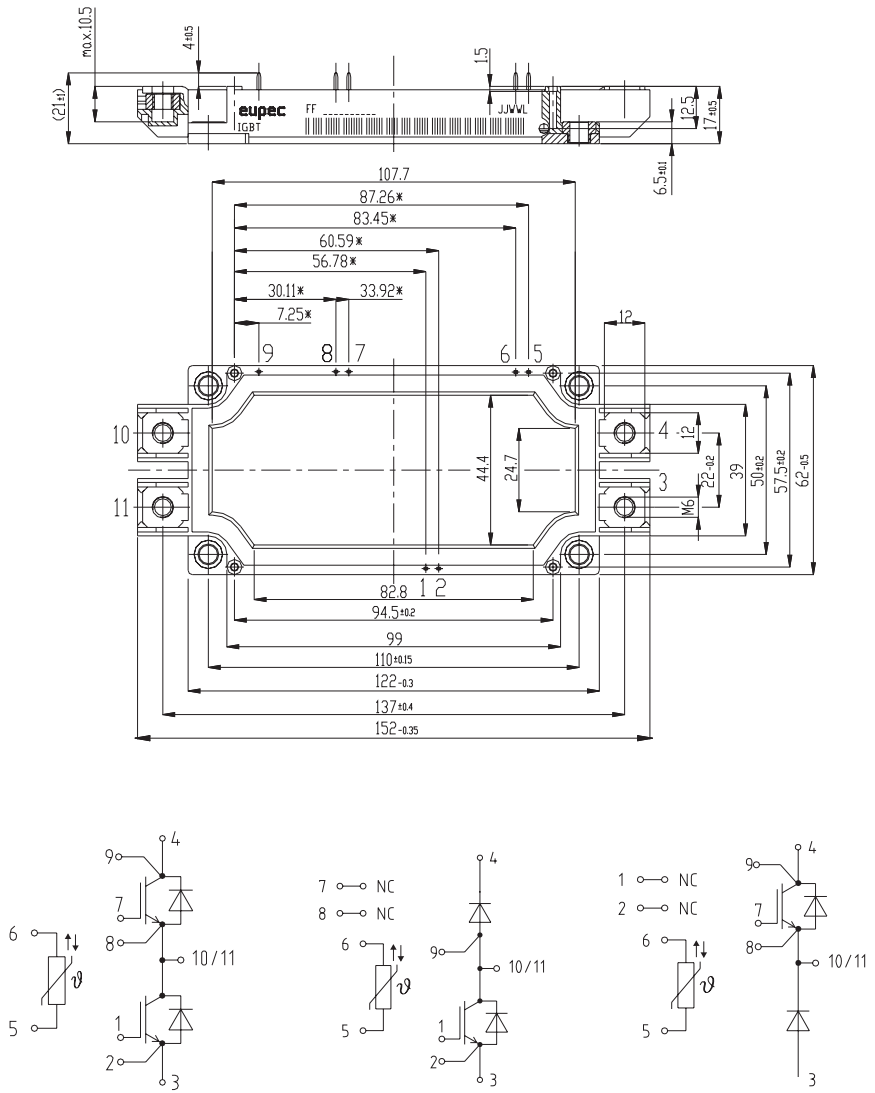


радиодетали электронные компоненты со склада и под заказ

## IHM H_IH1

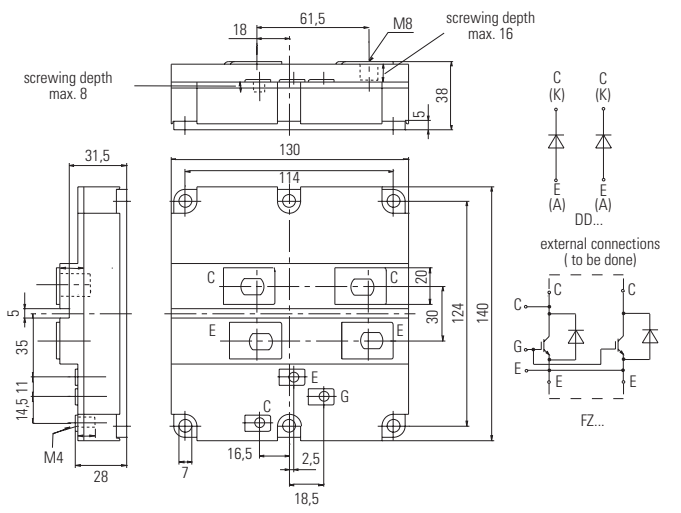


## IHM H_IH2

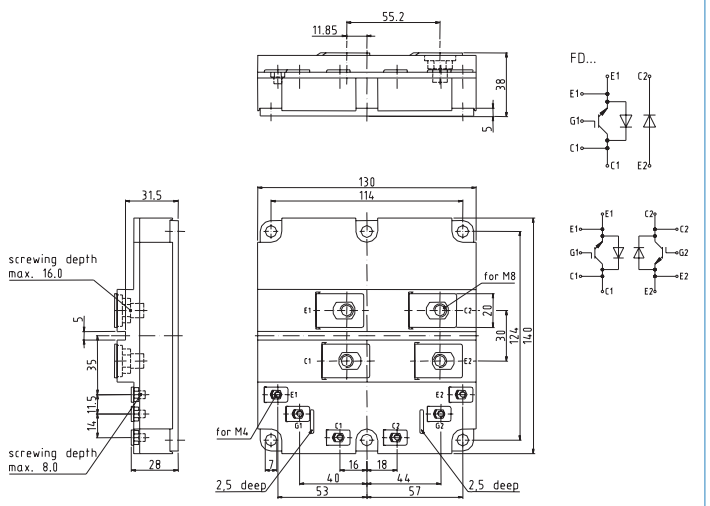


## IHM/IHV H_IH4

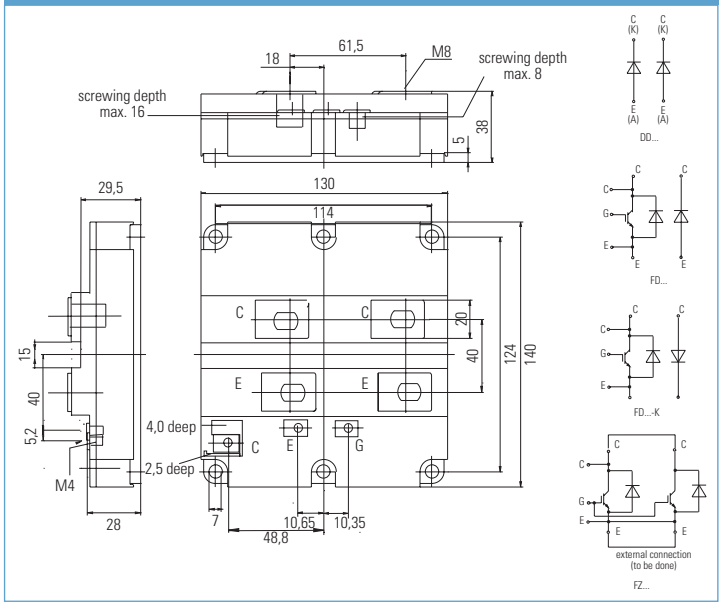


## IHM H_IH5

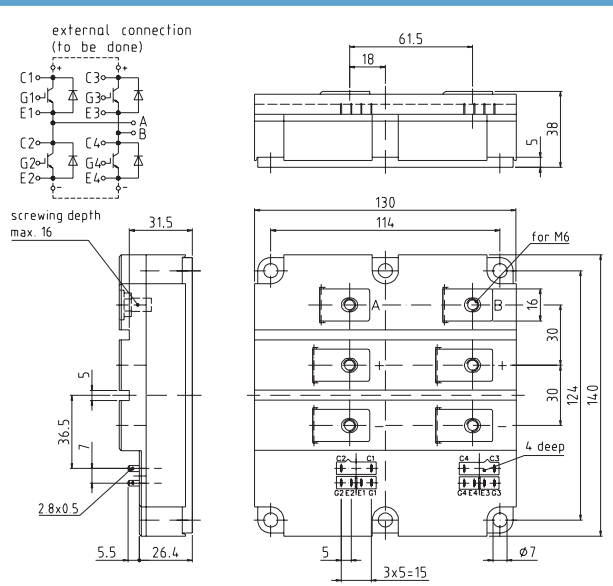

г.Минск тел.8(017)2005646 www.fotorele.net модули EUPEC IGBT Infineon minsk17@tut.by



## IHV — H_IH6

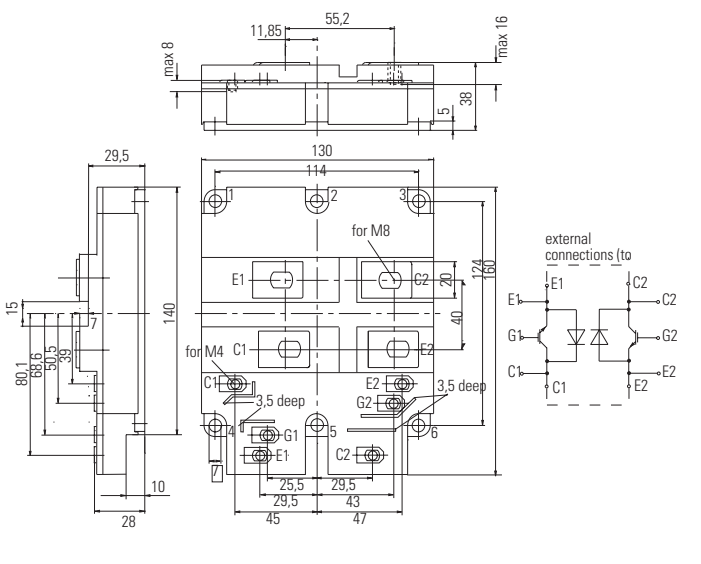


## IHM/IHV — H_IH7

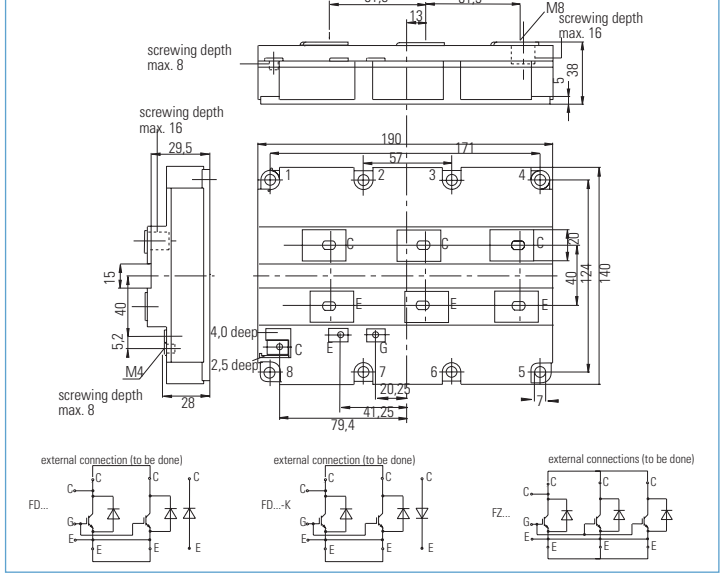


## IHM/IHV — H_IH7B

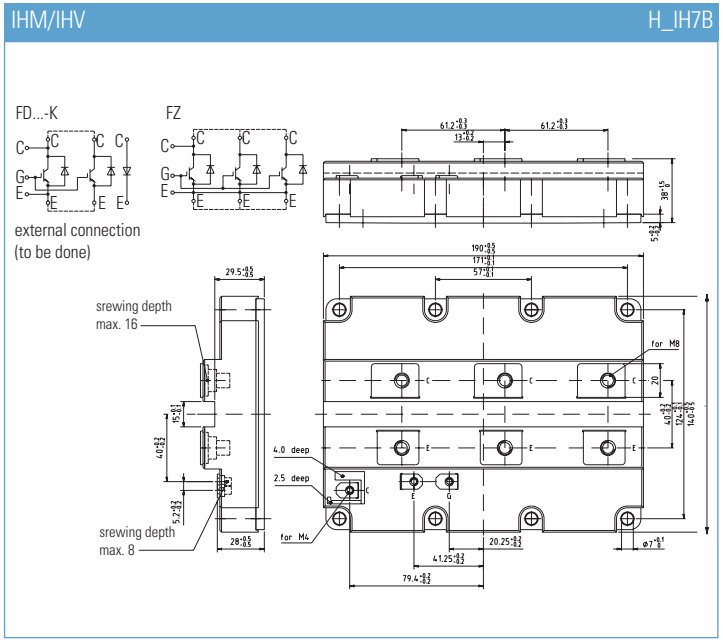


## IHM — H_IH8

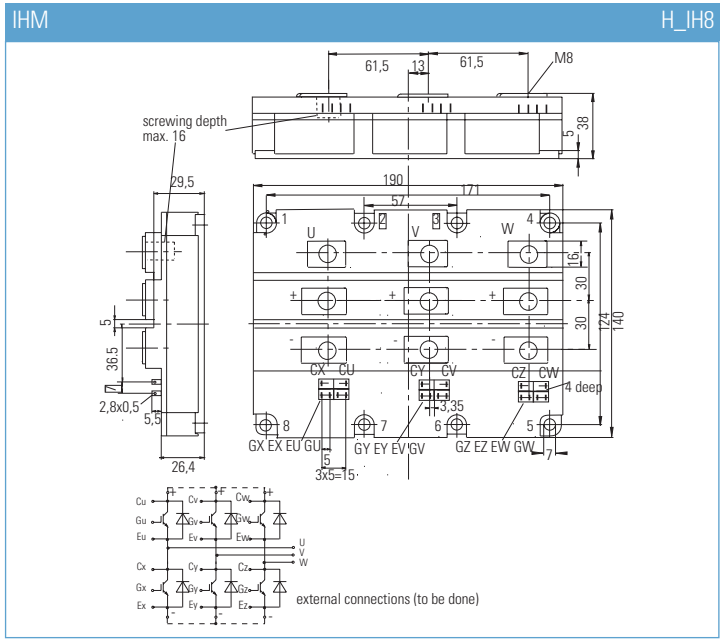


радиодетали электронные компоненты со склада и под заказ

## IHM/IHV H_IH9

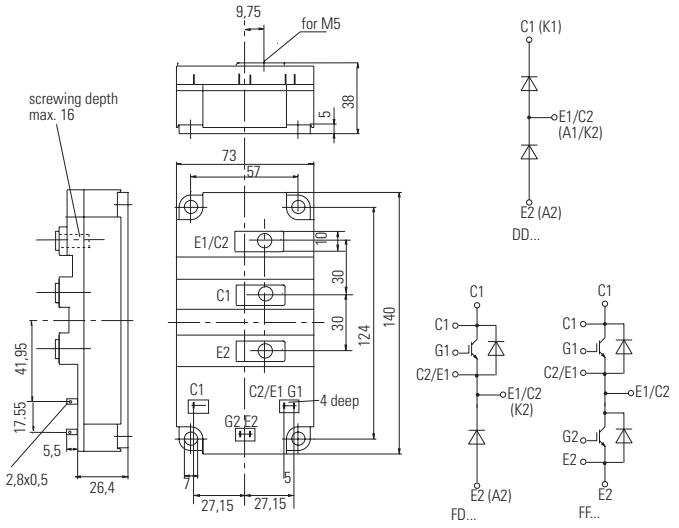


## IHV H_IH10

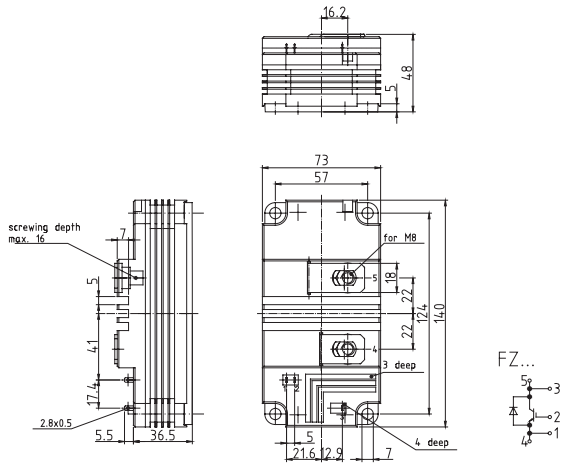


## IHV H_IH11

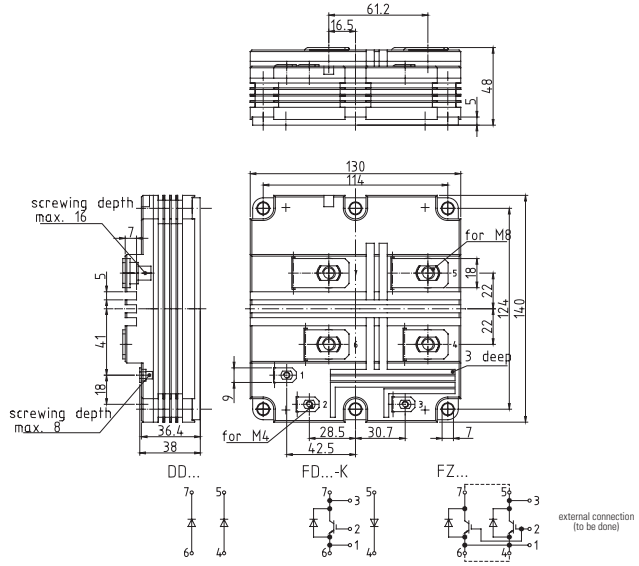


## IHV H_IH12

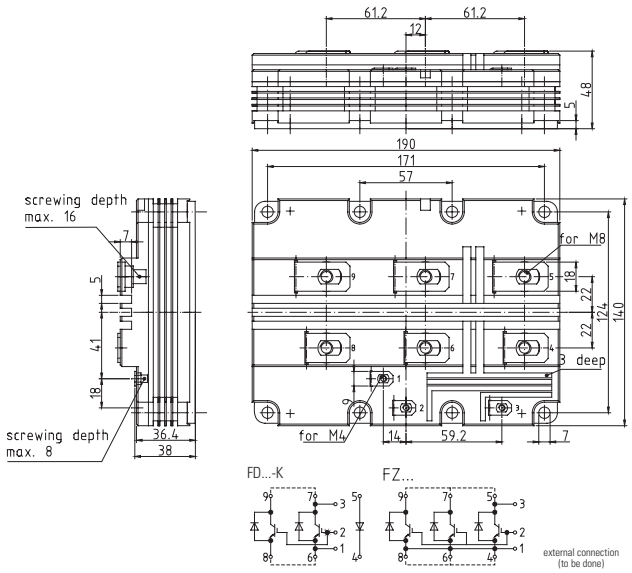

г.Минск тел.8(017)2005646 www.fotorele.net модули EUPEC IGBT Infineon minsk17@tut.by



## EasyBRIDGE750 — L_750d

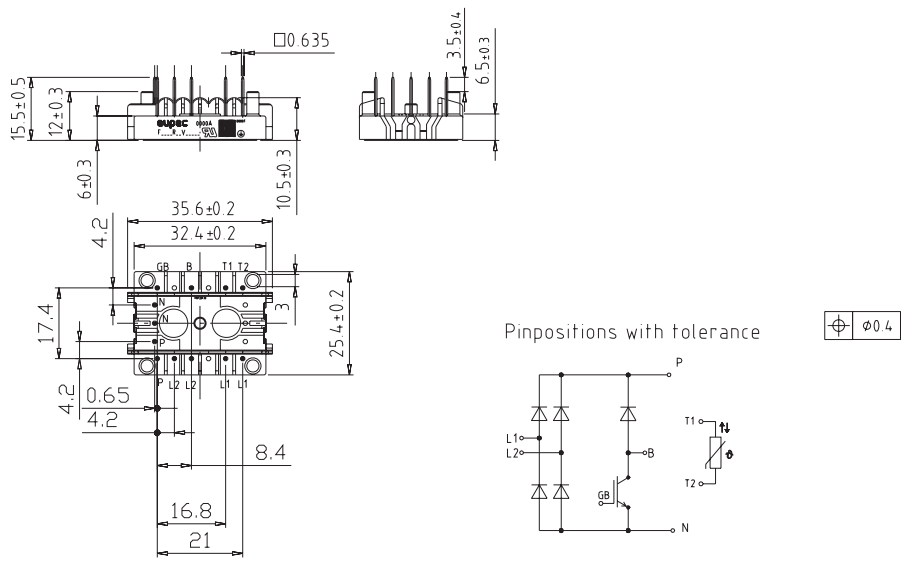


## EasyBRIDGE750 — L_750e

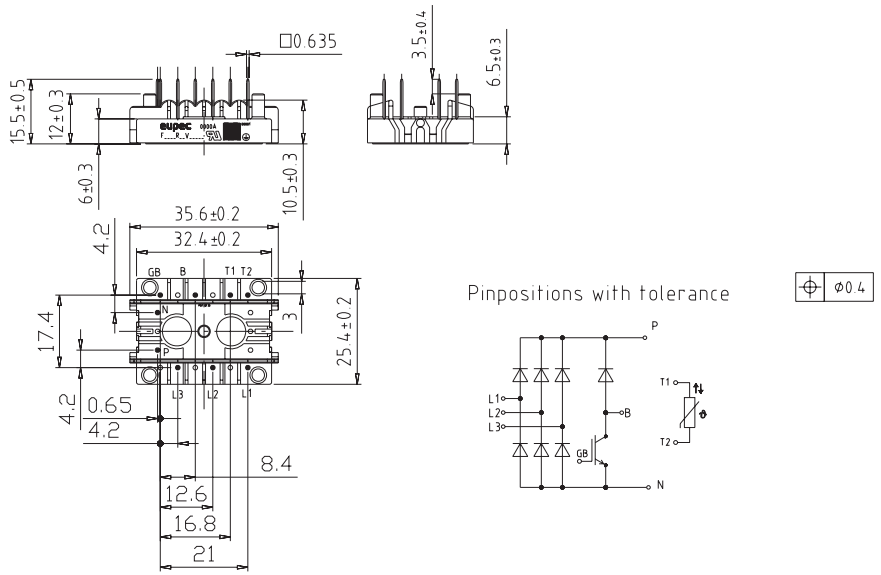


## EasyBRIDGE1 — L_1c

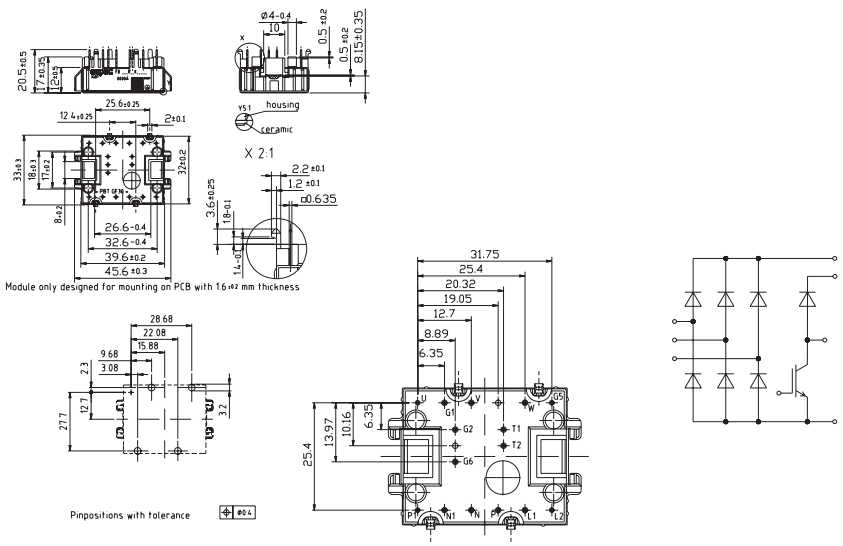


## EasyBRIDGE2 — L_2i

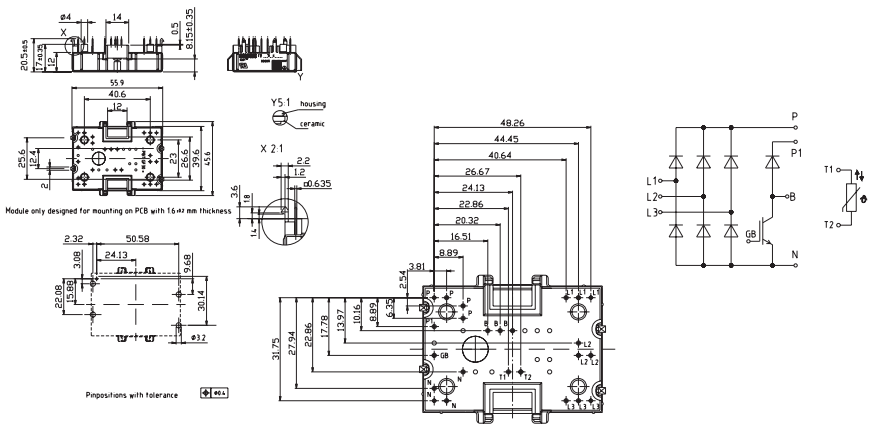


радиодетали электронные компоненты со склада и под заказ

## EconoBRIDGE™ Rectifier 2 M_E2g

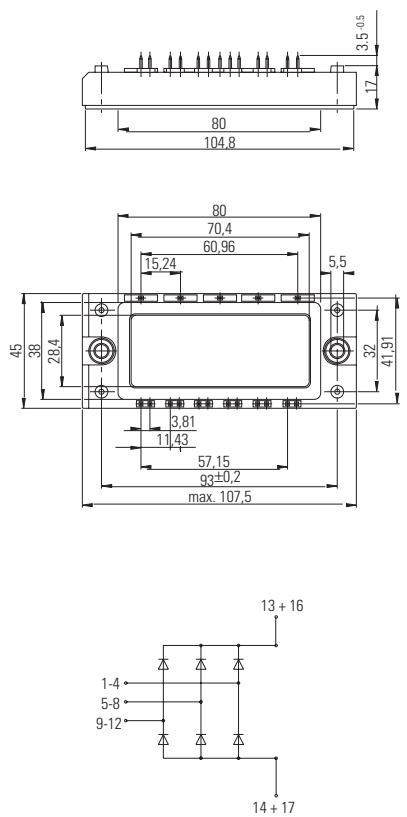


## EconoBRIDGE™ Rectifier 2 M_E2h

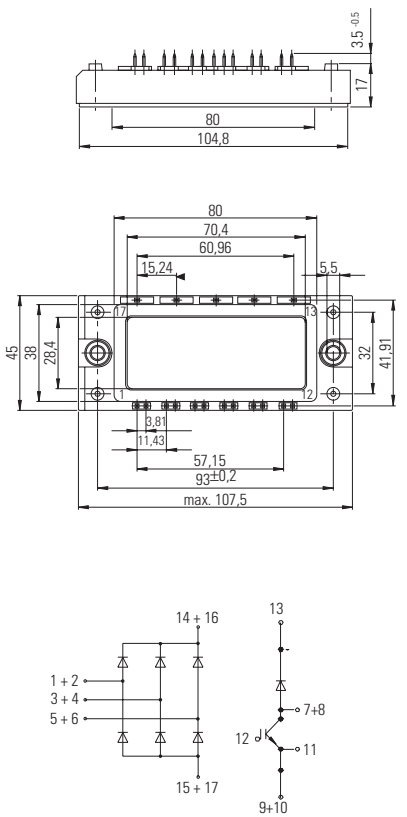


## EconoBRIDGE™ Rectifier 2 M_E2i

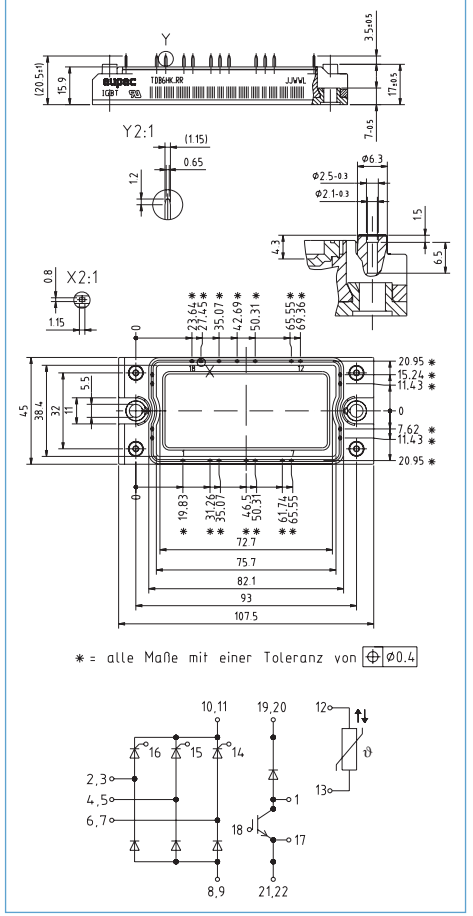


## EconoBRIDGE™ Rectifier 2 M_E2j

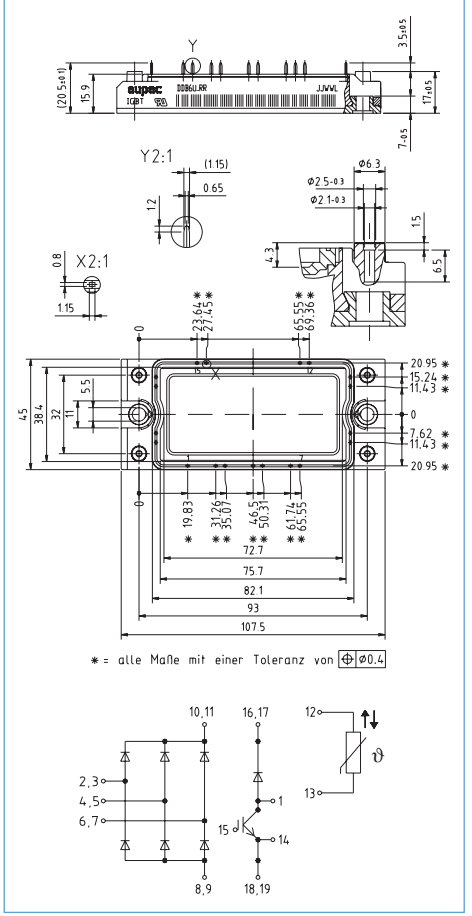

г.Минск тел.8(017)2005646 www.fotorele.net модули EUPEC IGBT Infineon minsk17@tut.by



## IsoPACK™ 42 — M_1Pa

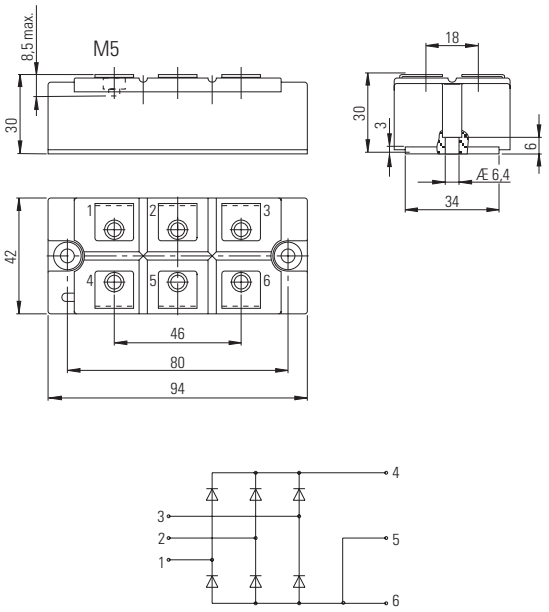


## IsoPACK™ 54 — M_1Pb

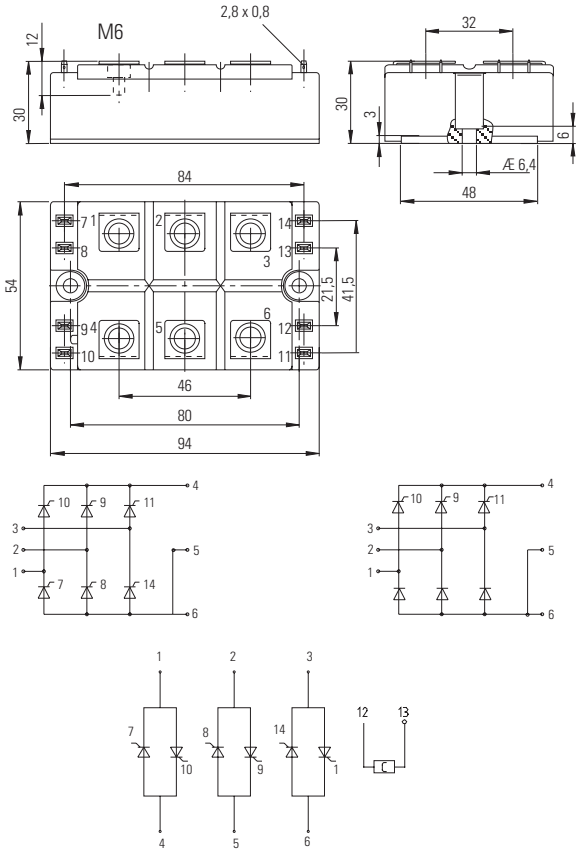


радиодетали электронные компоненты со склада и под заказ

## 20 mm TP20

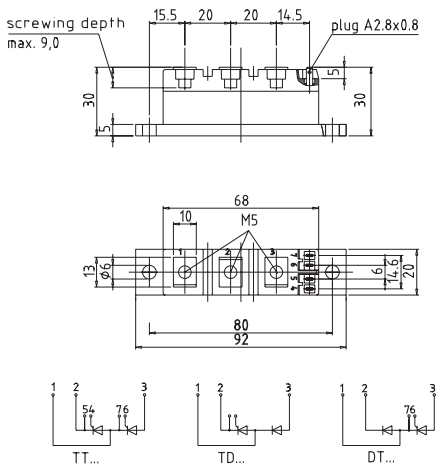


## 25 mm TP25

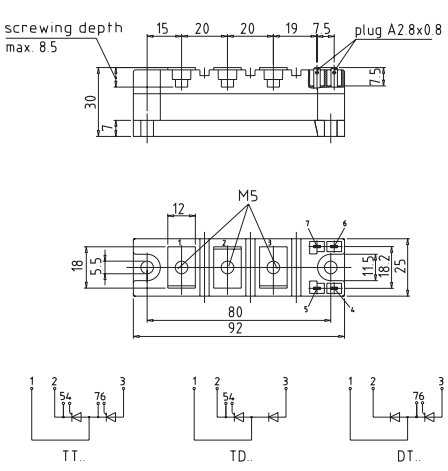


## 30 mm TP30

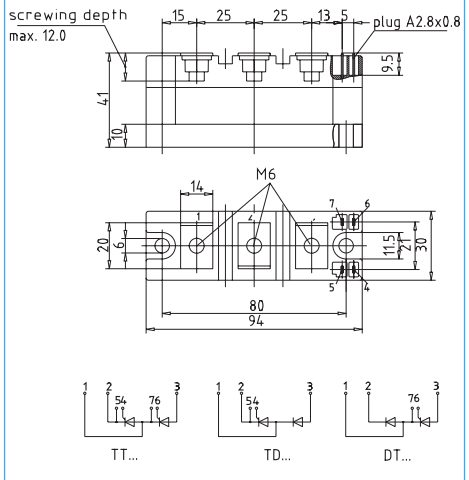


## 34 mm TP34

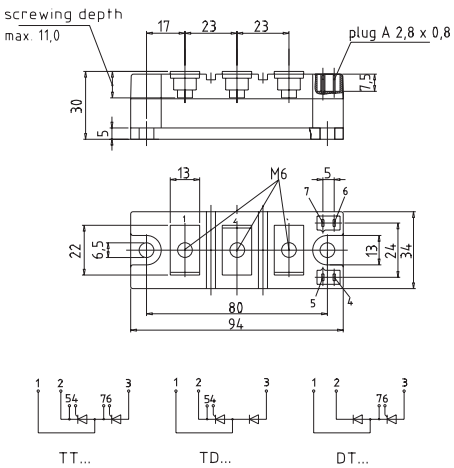


## 50 mm TP50

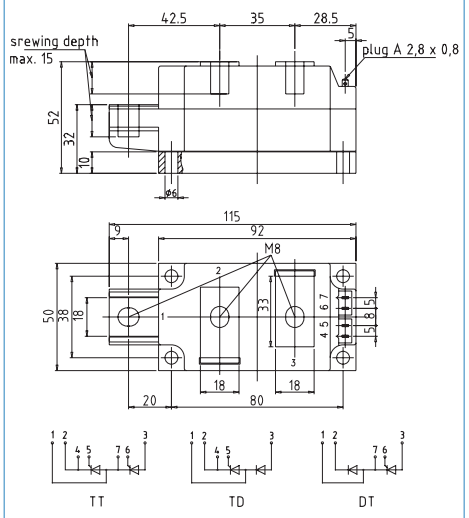


## 50 mm TP50.1

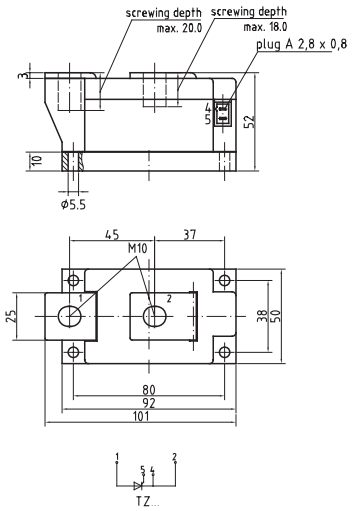


## 60 mm TP60

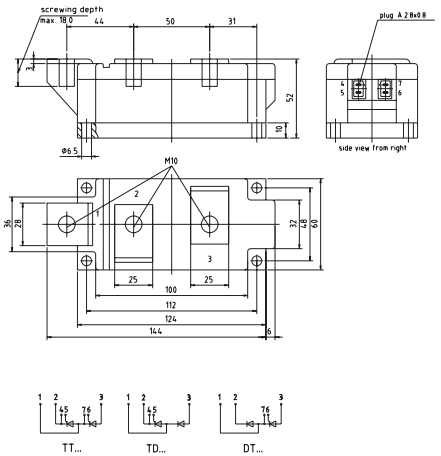

## 70 mm — TP70

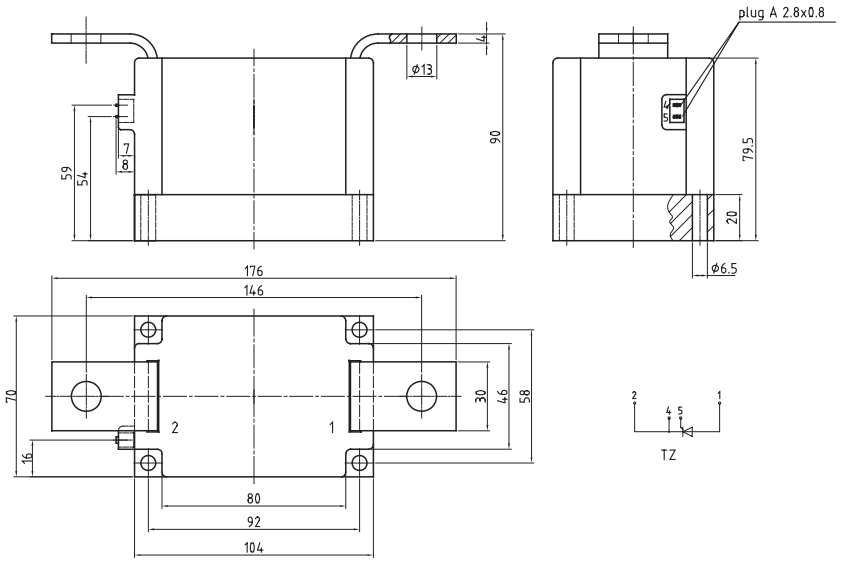


## 20 mm — DP20

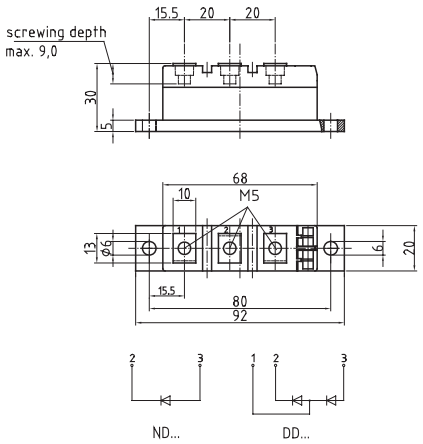


## 25 mm — DP25

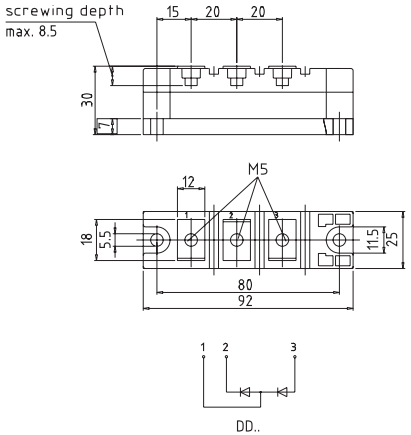


## 30 mm — DP30

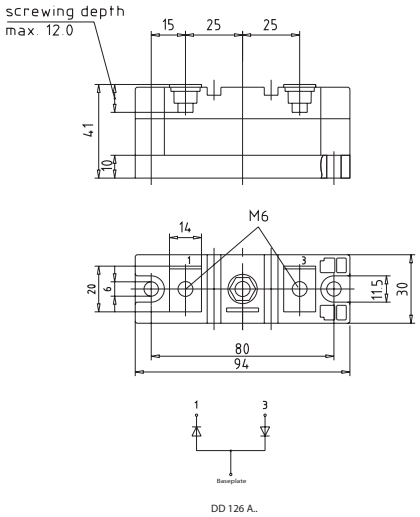

## 30 mm DP30.1

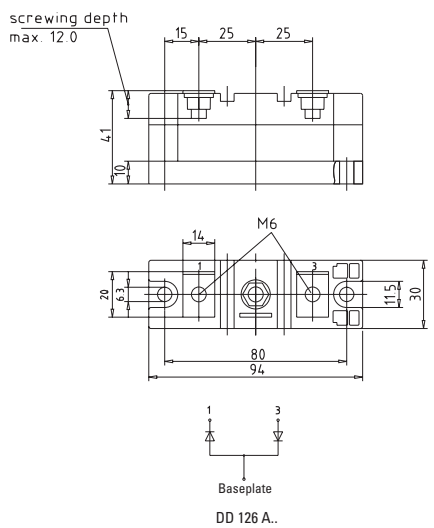


DD 126 A..

## 34 mm DP34

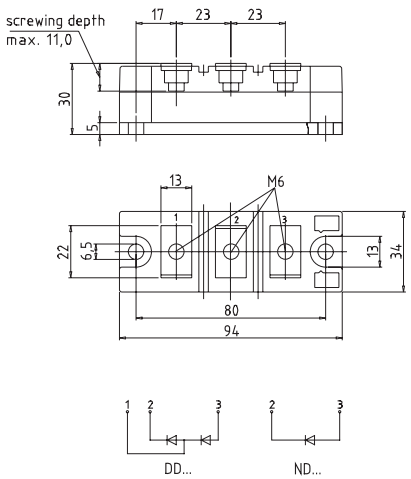


## 50 mm DP50

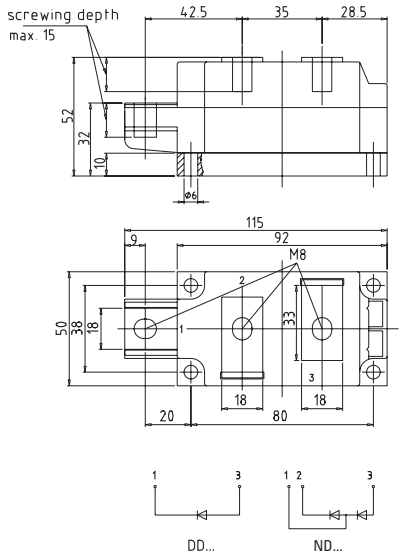


## 50 mm DP50.1

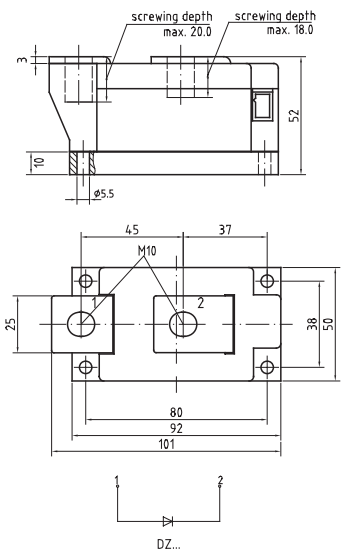


## 50 mm DP50ND

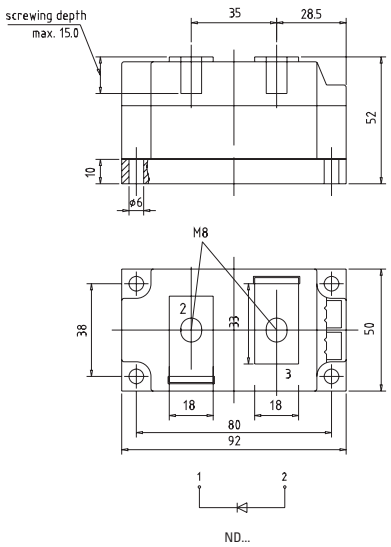


## 60 mm DP60

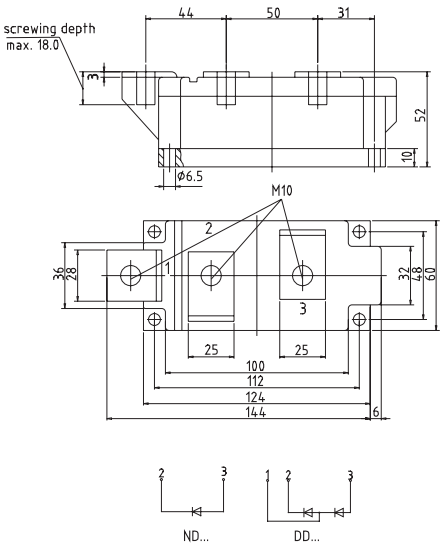


## 70 mm DP70

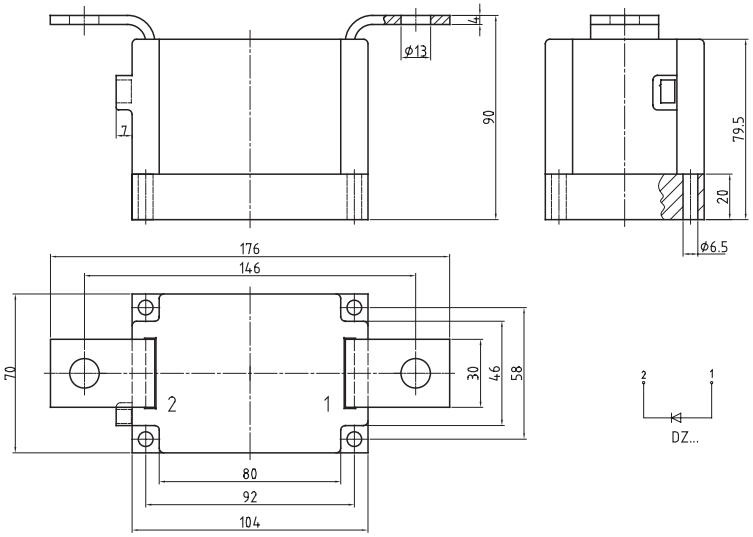

## TSW27

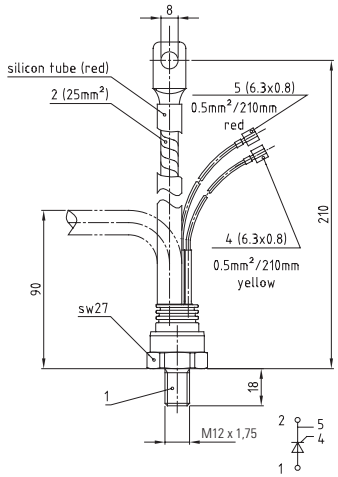


## TFL36

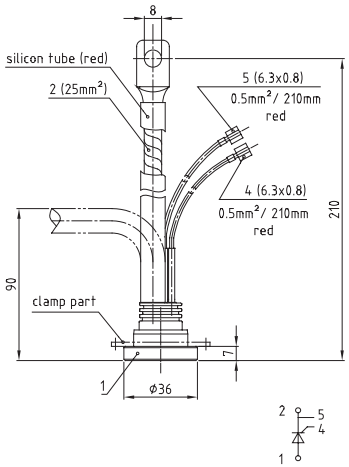


## TSW41

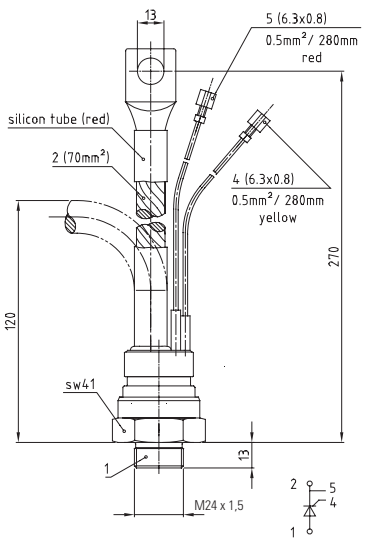


## TFL54

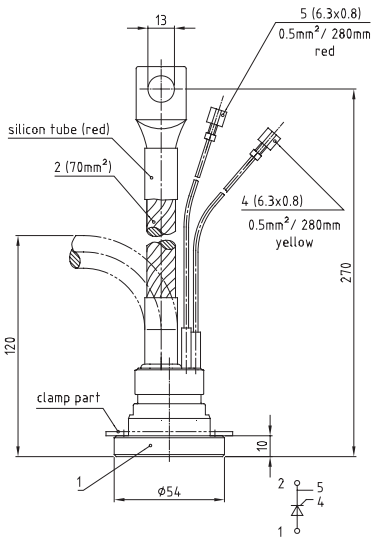

## T41.14

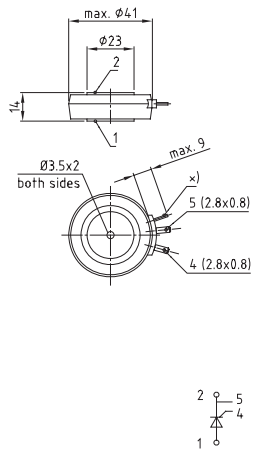


## T50.14

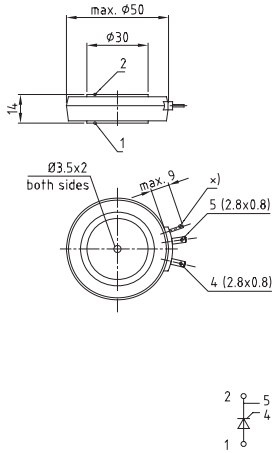


## T60.14

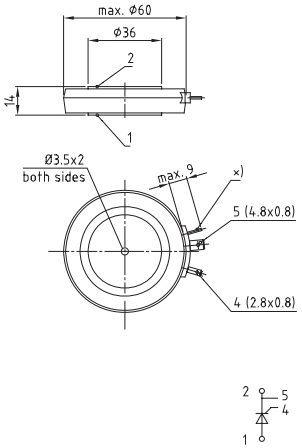


## T75.14

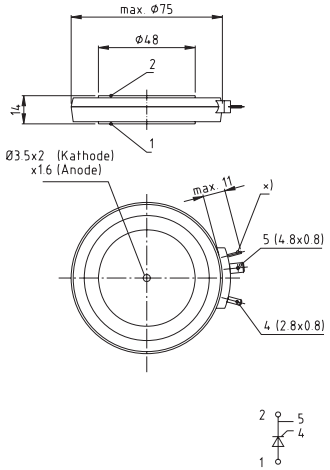


## T57.26

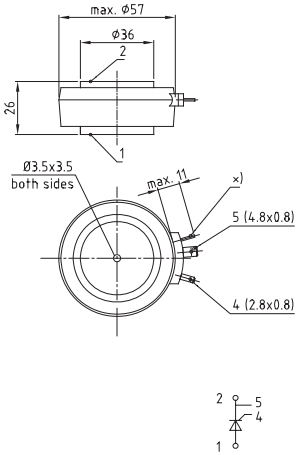


## T75.26

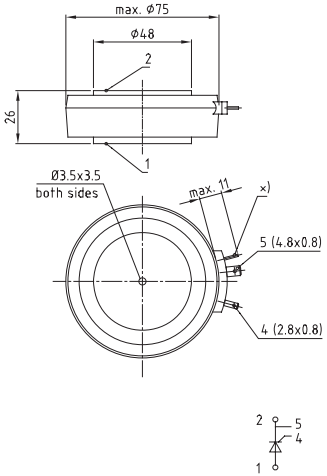


## T100.26

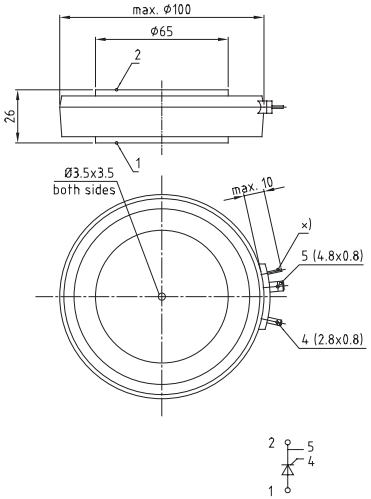


## T100.35

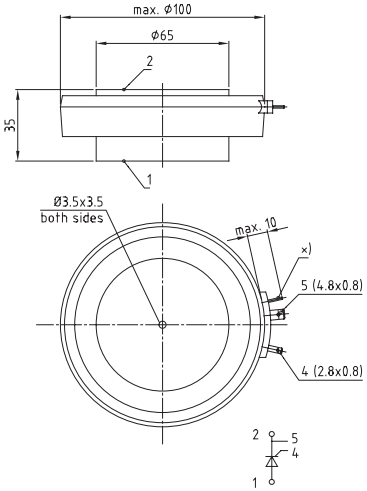


X) = evacuation pipe

г.Минск тел.8(017)2005646 www.fotorele.net модули EUPEC IGBT Infineon minsk17@tut.by



## T110.26

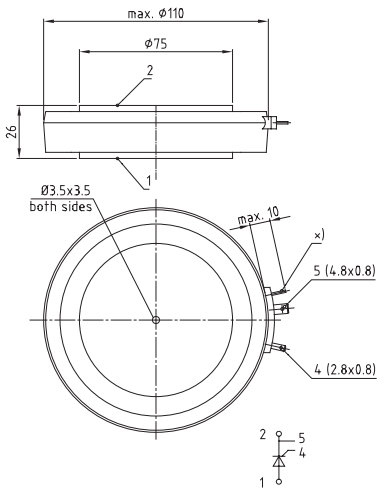


## T110.35

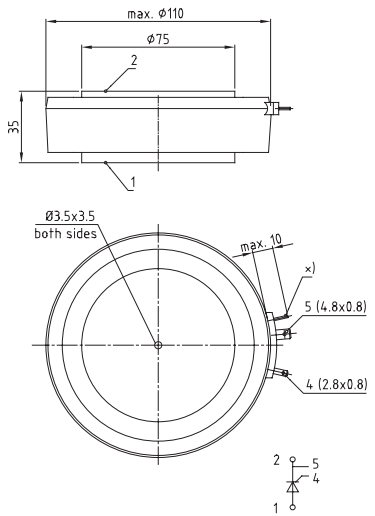


## T57.26K

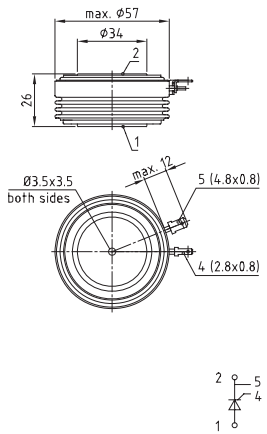


## T58.26K

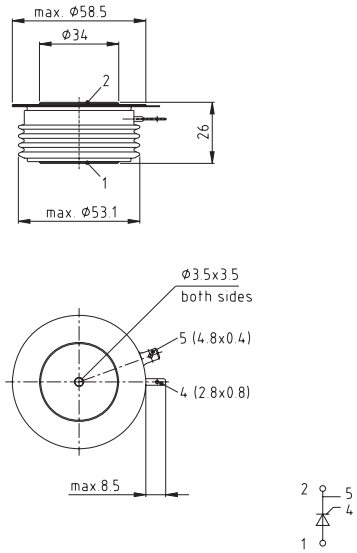


## T75.26K

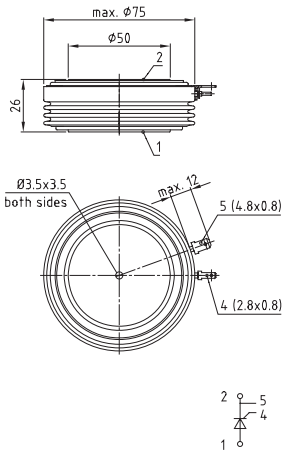


## T76.26K

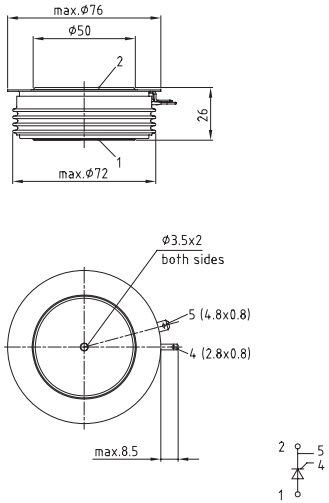


X) = evacuation pipe

радиодетали электронные компоненты со склада и под заказ

## T76.35K

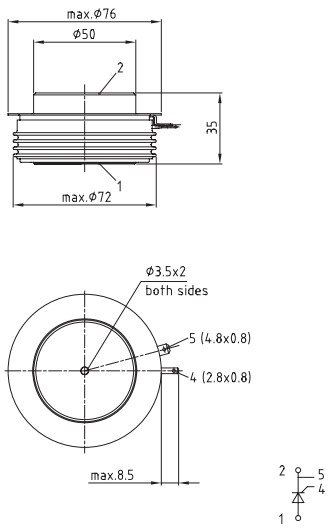


## T100.26K

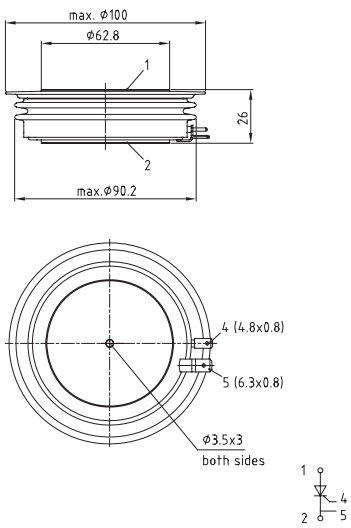


## T120.26K

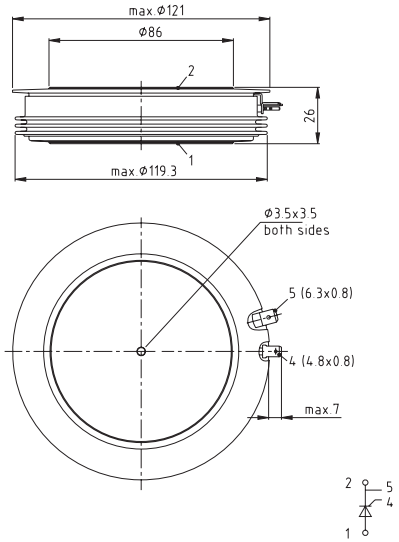


## T120.35K

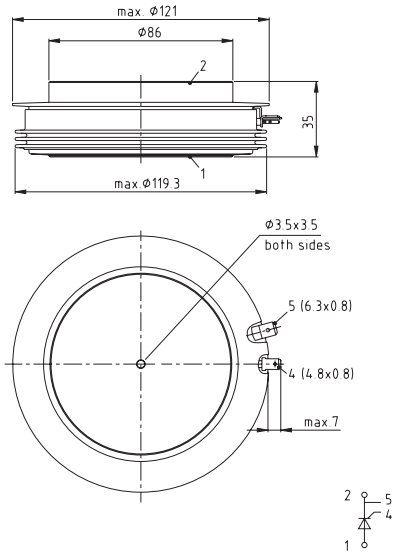


## T150.26K

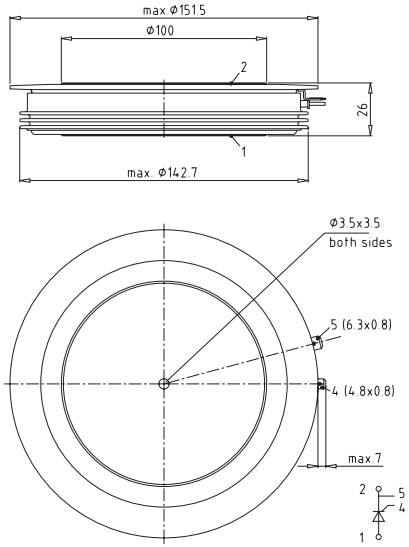


## T150.35K

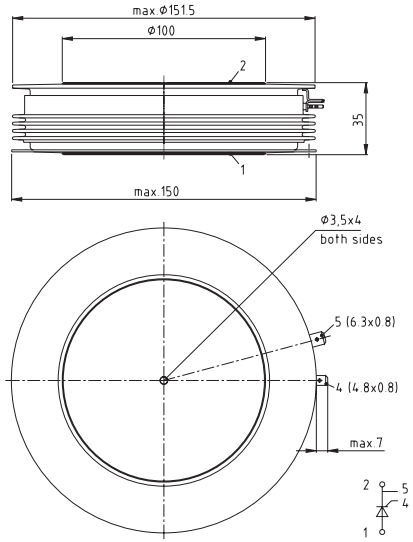

г.Минск тел.8(017)2005646 www.fotorele.net модули EUPEC IGBT Infineon minsk17@tut.by



## T172.35K

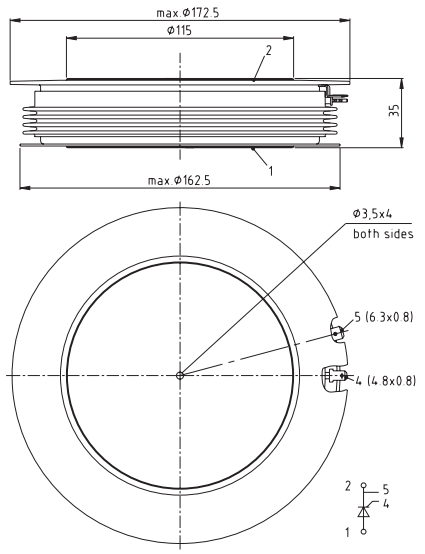


## T76.35L

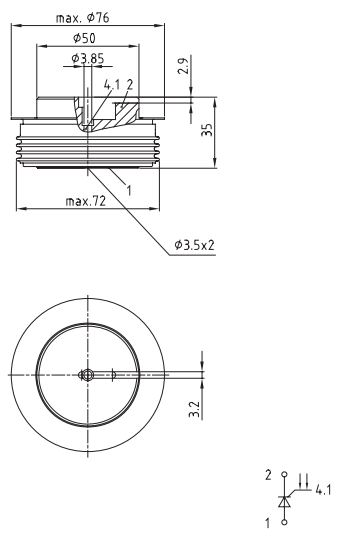


## T150.40L

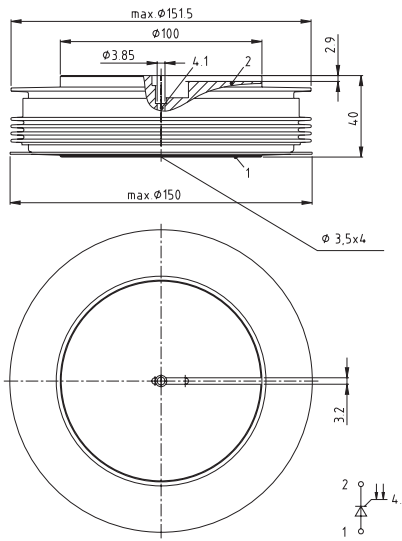


## T172.40L

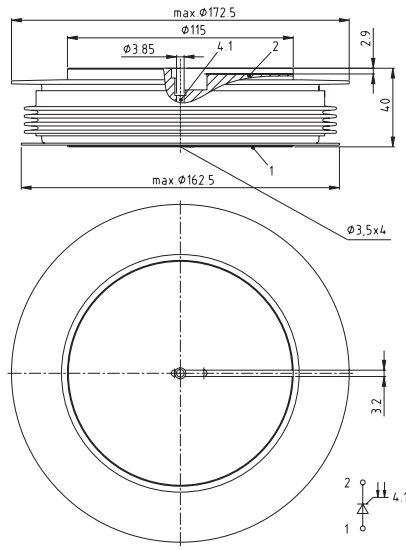


радиодетали электронные компоненты со склада и под заказ

## DSW27

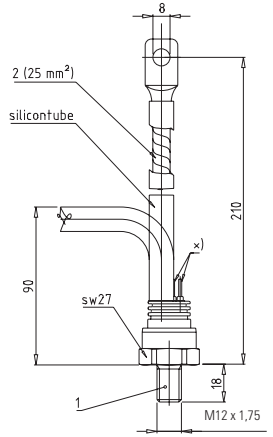


| type | symbol | cathode | anode | prot. flex. tubing |
|---|---|---|---|---|
| N, S | | rope (2) | case (1) | red |
| K, U | | case (1) | rope (2) | blue |

## DSW27.1

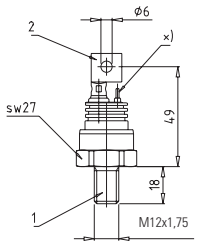


| type | symbol | cathode | anode |
|---|---|---|---|
| N, S | | conection pin | case (1) |
| K, U | | case (1) | conection pin |

## DSW27.2

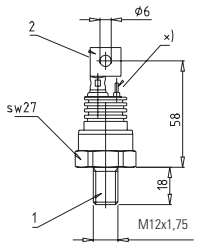


| type | symbol | cathode | anode |
|---|---|---|---|
| N, S | | conection pin | case (1) |
| K, U | | case (1) | conection pin |

## DFL36

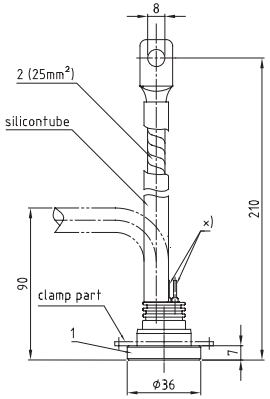


| type | symbol | cathode | anode | prot. flex. tubing |
|---|---|---|---|---|
| N, S | | rope (2) | case (1) | red |
| K, U | | case (1) | rope (2) | blue |

## DSW41

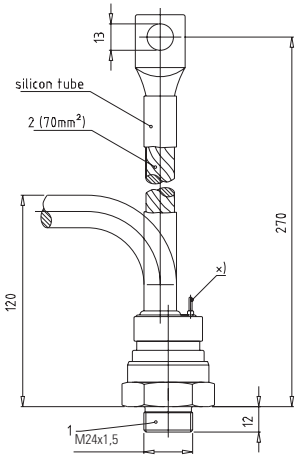


| type | symbol | cathode | anode | prot. flex. tubing |
|---|---|---|---|---|
| N, S | | rope (2) | case (1) | red |
| K, U | | case (1) | rope (2) | blue |

## DSW41.1

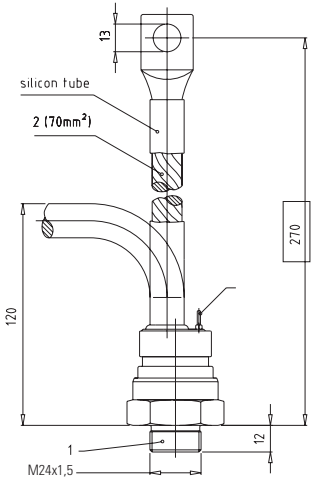


| type | symbol | cathode | anode | prot. flex. tubing |
|---|---|---|---|---|
| N, S | | rope (2) | case (1) | red |
| K, U | | case (1) | rope (2) | blue |

## DFL54

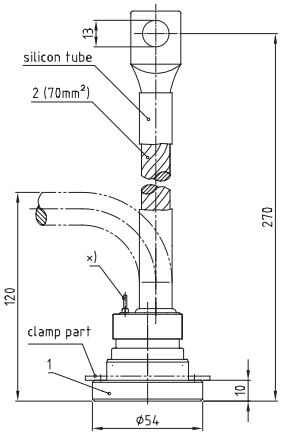


| type | symbol | cathode | anode | prot. flex. tubing |
|---|---|---|---|---|
| N, S | | rope (2) | case (1) | red |
| K, U | | case (1) | rope (2) | blue |

X) = evacuation pipe

г.Минск тел.8(017)2005646 www.fotorele.net модули EUPEC IGBT Infineon minsk17@tut.by



## D41.14

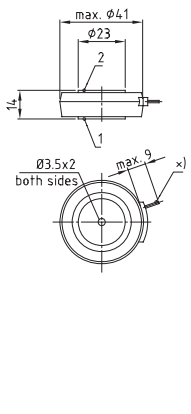


## D50.14

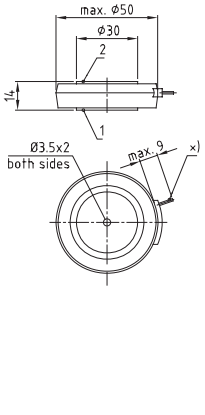


## D57.26

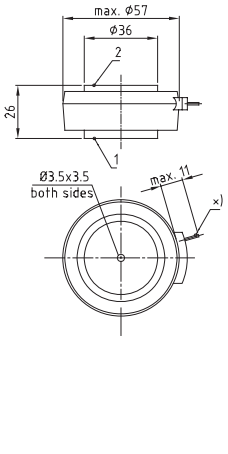


## D60.8

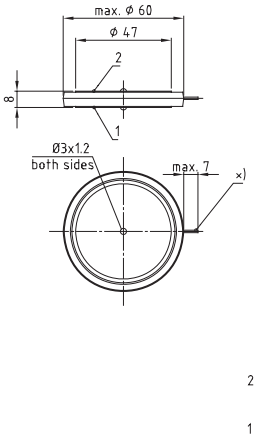


## D60.14

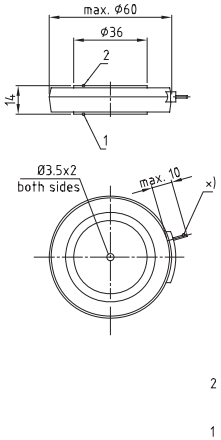


## D73.8

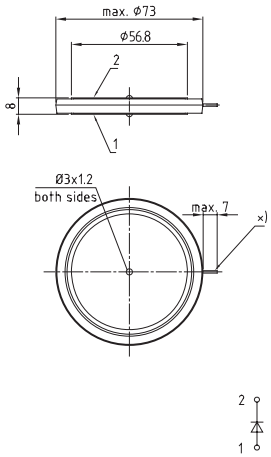


## D75.14

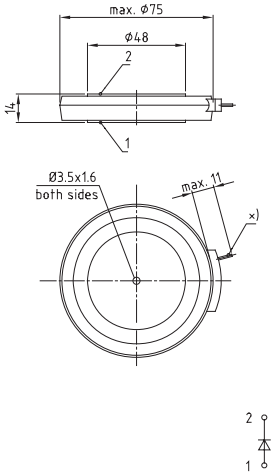


## D75.26

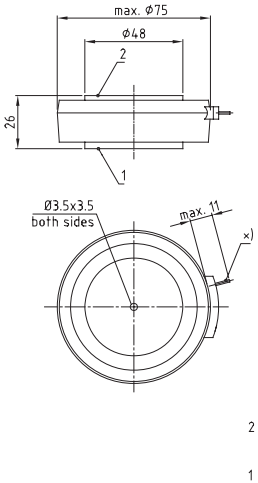


X) = evacuation pipe

радиодетали электронные компоненты со склада и под заказ

## D100.26

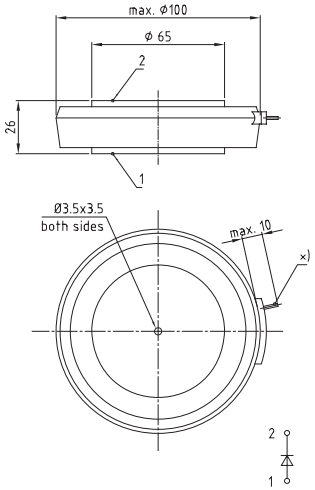


## D110.26

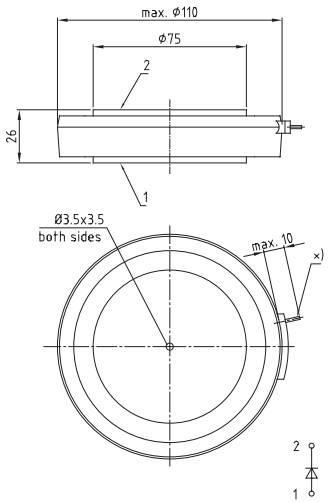


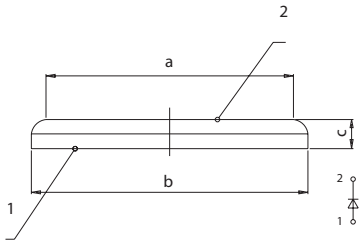


| Bezeichnung | a | b | c |
|---|---|---|---|
| 25DN06 | Ø 22 | Ø 25 | 3,6 |
| 38DN06 | Ø 34 | Ø 38 | 4,0 |
| 46DN06 | Ø 43 | Ø 46 | 4,0 |
| 56DN06 | Ø 50 | Ø 56 | 5,0 |
| 65DN06 | Ø 58 | Ø 65 | 5,0 |

X) = evacuation pipe

## D41.14K

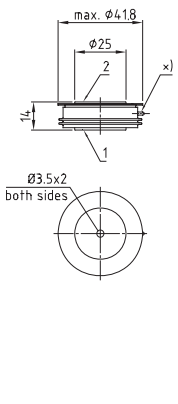


## D57.26K

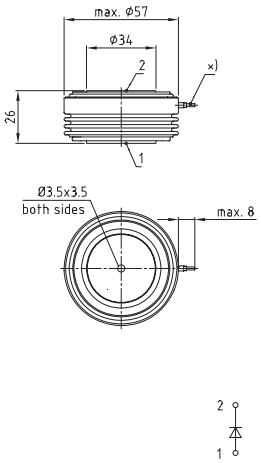


## D58.26K

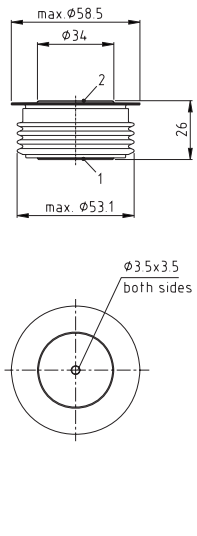


## D75.26K

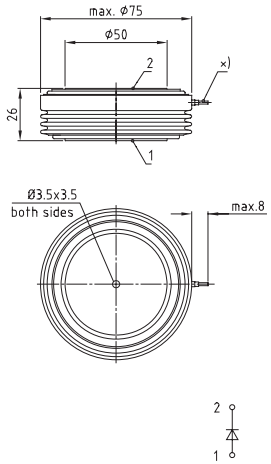

г.Минск тел.8(017)2005646 www.fotorele.net модули EUPEC IGBT Infineon minsk17@tut.by



## D76.14K

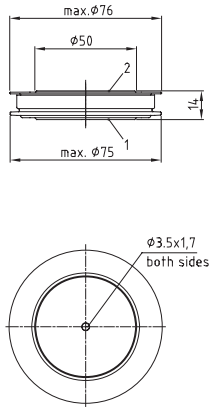


## D76.26K

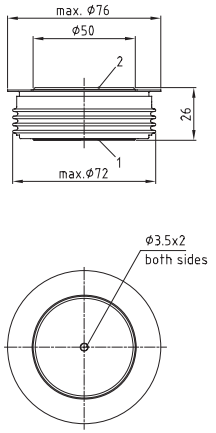


## D100.26K

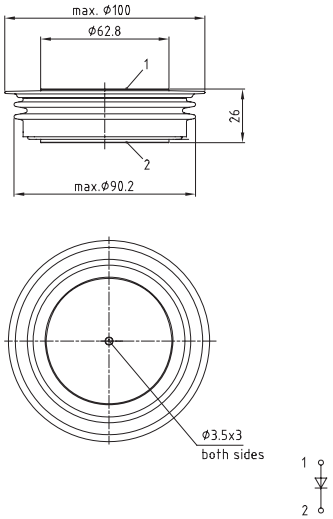


## D120.26K

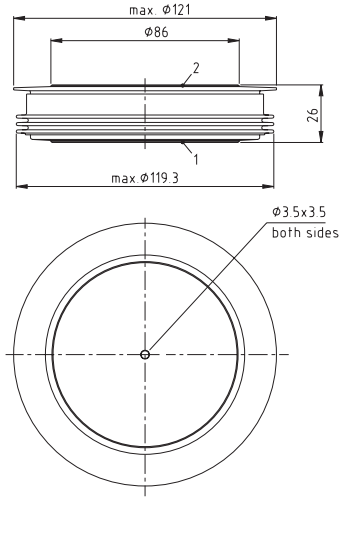


## D120.35K

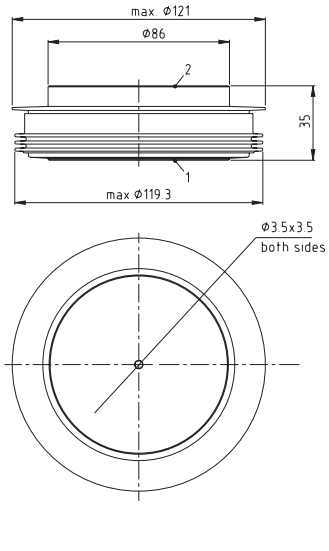


## D150.26K

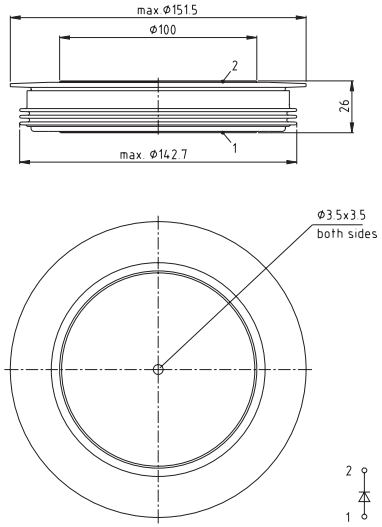


радиодетали электронные компоненты со склада и под заказ

## I57.26

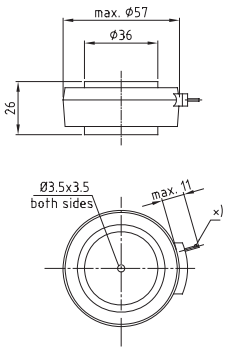


## I65.35

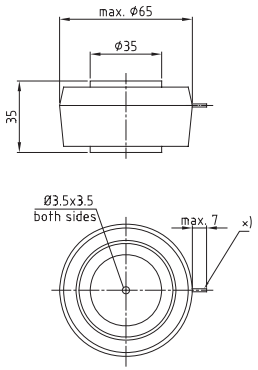


## I72.8

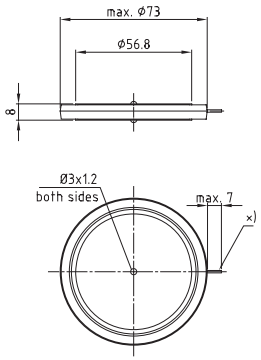


## I75.14

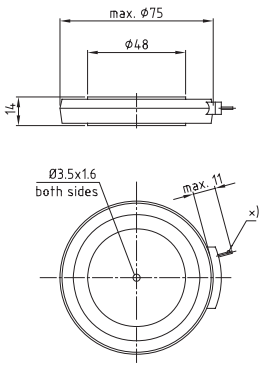


## I75.26

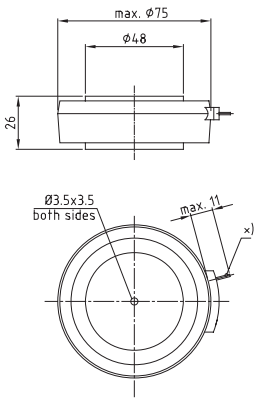


## I120.35

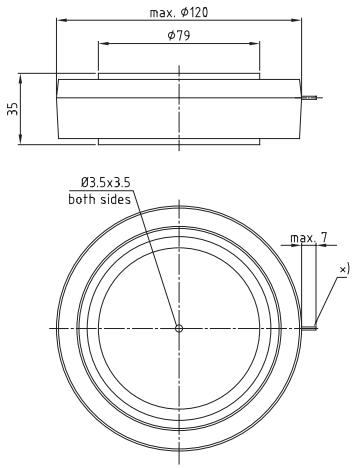


X) = evacuation pipe

г.Минск тел.8(017)2005646 www.fotorele.net модули EUPEC IGBT Infineon minsk17@tut.by



## V50..M

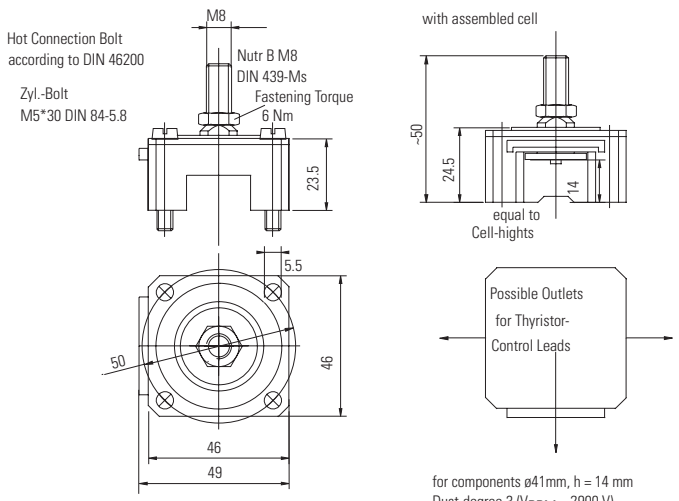


V 50-14.45 M F = 4.5 kN
V 50-14.60 M F = 6.0 kN

for components ø41mm, h = 14 mm
Dust-degree 3 ($V_{RRM}$ = 2900 V)
Supply Voltage 1 $kV_{eff}$

## V50..N

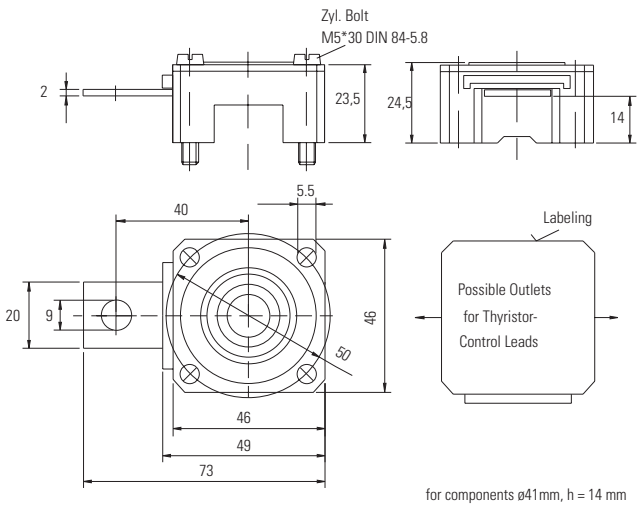


V 50-14.45 N F = 4.5 kN
V 50-14.60 N F = 6.0 kN

for components ø41mm, h = 14 mm
Dust-degree 3 ($V_{RRM}$ = 2900 V)
Supply Voltage 1 $kV_{eff}$

## V61..M

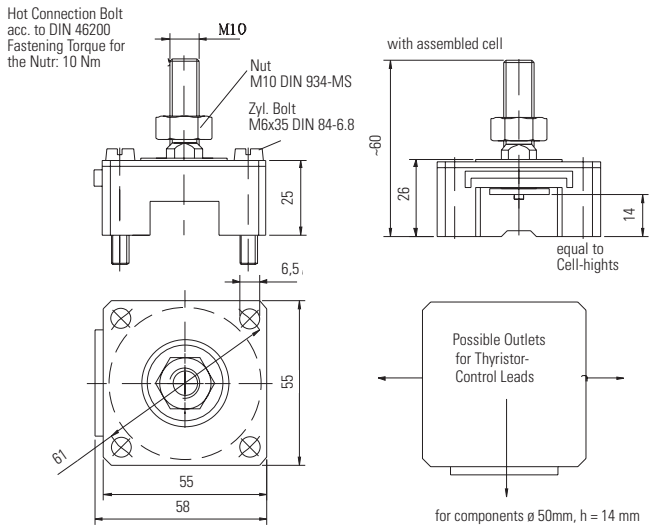


V61-14.80 M F = 8.0 kN

for components ø 50mm, h = 14 mm
Dust-degree 3 ($V_{RRM}$ = 2900 V)
Supply Voltage 1 $kV_{eff}$

## V61..N

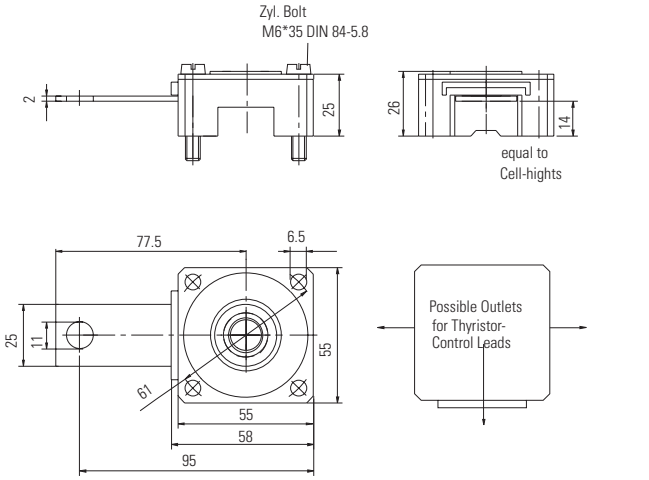


V61-14.80 N F = 8 kN
V61-14.100 N F = 10 kN

for components ø 50mm, h = 14 mm
Dust-degree 3 ($V_{RRM}$ = 2900 V)
Supply Voltage 1 $kV_{eff}$

радиодетали электронные компоненты со склада и под заказ

## V 72

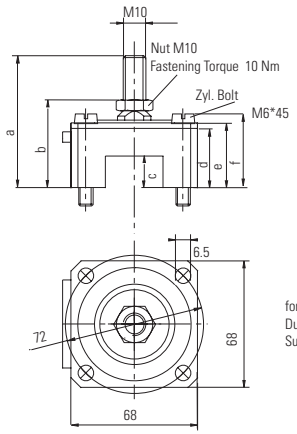


for components ø60mm, h = 14/26 mm
Dust-degree 3 ($V_{RRM}$ = 4000/5000 V)
Supply Voltage 1,4/1,8 $kV_{eff}$

| Clamping device | c | l | a | b | d | e | f | F | U eff |
|---|---|---|---|---|---|---|---|---|---|
| V72-14.150M | 14 | 45 | 68 | 49 | 32 | 36 | 40,5 | 15 kN | 1400V |
| V72-26.150M | 26 | 60 | 80 | 61 | 44 | 48 | 52,5 | 15 kN | 1800V |
| V72-26.80 M | 26 | 60 | 80 | 61 | 44 | 48 | 52,5 | 8 kN | 1800V |
| V72-26.120M | 26 | 60 | 80 | 61 | 44 | 48 | 52,5 | 12 kN | 1800V |
| V72-26.120MS | 26 | 60 | 80 | 61 | 44 | 49 | 53,5 | 12 kN | 2100V |

## V 89

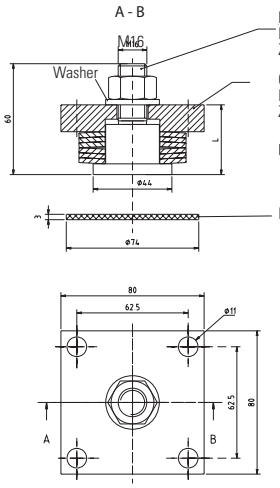


Bolt
DIN 267
Zn 8 gl c B (A3K)

Clamping plate
DIN 267
Zn 8 gl c B (A3K)

pre-pressed power unit

Isolating disc

mounting instructions:
- part are to be centered
- the clamping plate must be fixed equally with 4 Bolts M10 - 8.8 (not included) until the washer is untight up to a gap of 0.2 mm.
- glue untightened washer to avoid noises

For max. 2 kVeff applications
Dust-degree 3
For higher voltage on request
For components D = 75 mm

| Type | Mat.-No. | clamping force | L |
|---|---|---|---|
| V89-26.400N | 6921 | 40KN | 38 |
| V89-26.300N | 3586 | 30KN | 39 |
| V89-26.170N | 12784 | 17KN | 40 |

## V 176

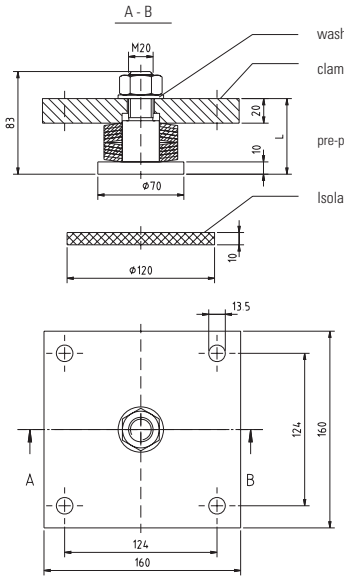


washer

clamping plate

pre-pressed power unit

Isolating disc

mounting instructions:
- part are to be centered
- the clamping plate must be fixed equally with 4 Bolts M12 - 8.8 (not included) until the washer is untight up to a gap of 0.2 mm.
- glue untightened washer to avoid noises

For max. 2,5 kVeff applications
Dust-degree 3
For components D = 150 mm

| Type | Mat.-No. | clamping force | L |
|---|---|---|---|
| V176-35.650N | 19610 | 65KN | 57.5 |
| V176-35.500N | 19611 | 50KN | 58.5 |
| V176-35.400N | 19612 | 40KN | 59.5 |

## V 100

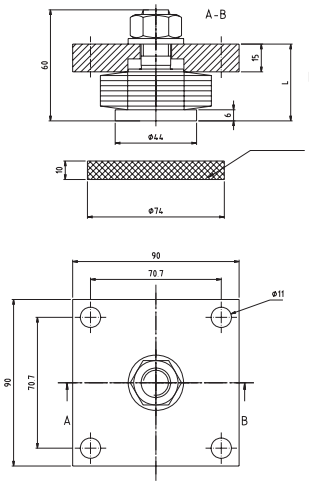


pre-pressed power unit

Isolating disc

mounting instructions:
- part are to be centered
- the clamping plate must be fixed equally with 4 Bolts M12 - 8.8 (not included) until the washer is untight up to a gap of 0.2 mm.
- glue untightened washer to avoid noises

For max. 2,5 kVeff applications
Dust-degree 3
For components D = 75 mm

| Type | Mat.-No. | clamping force |
|---|---|---|
| V100-35.200N | 23551 | 20KN |

г.Минск тел.8(017)2005646 www.fotorele.net модули EUPEC IGBT Infineon minsk17@tut.by



## EiceDRIVER™ 2ED300C17-S / 2ED300C17-ST

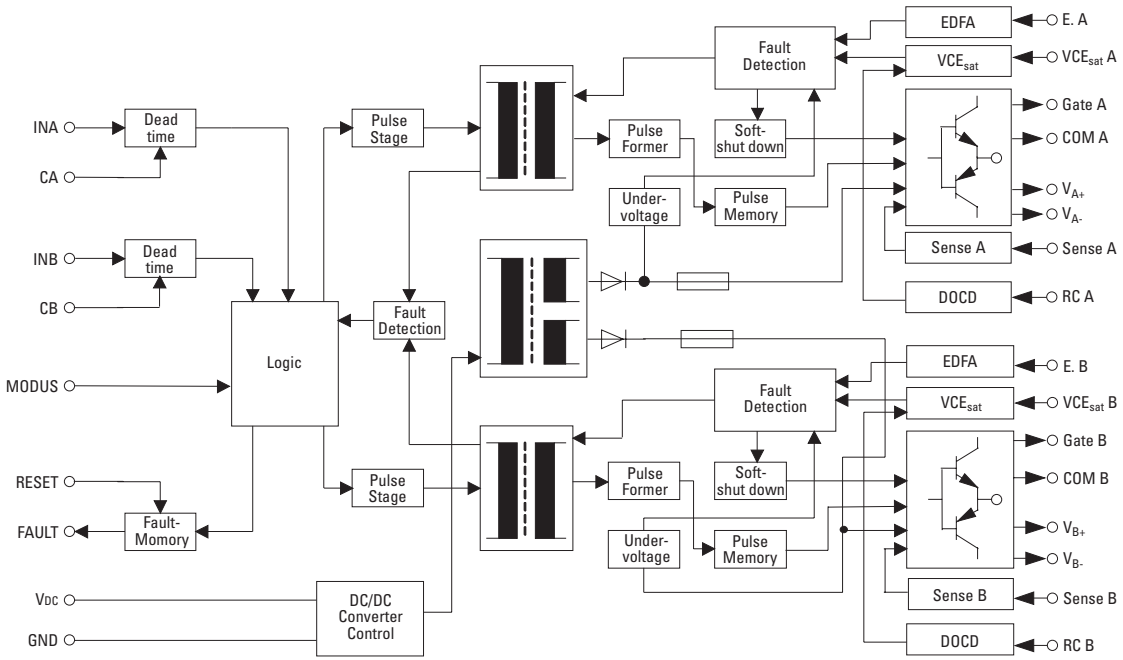


## EiceDRIVER™ 2ED020I12-F

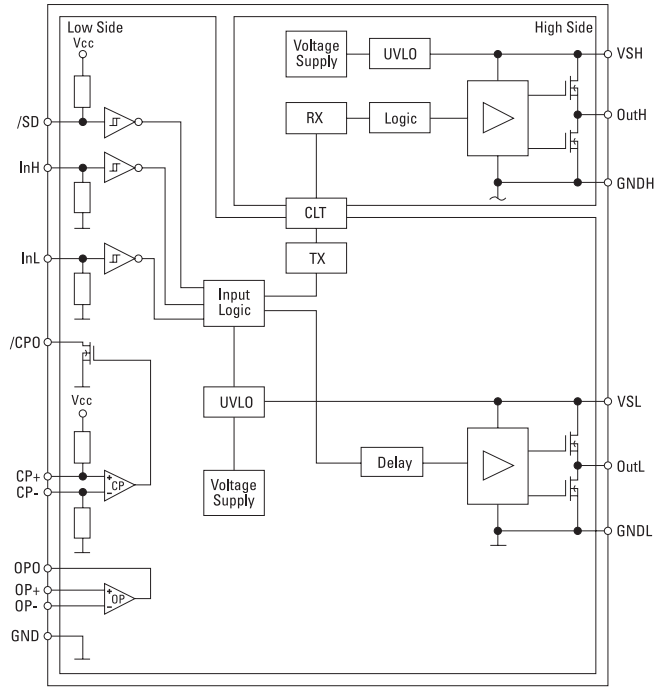


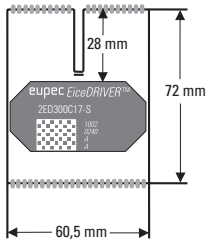


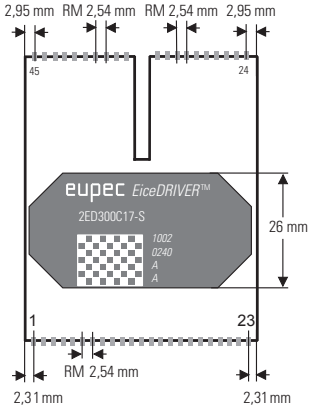


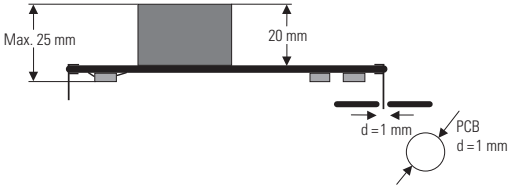


Clearance distance and creep page Primary/Secondary >15 mm
Clearance distance Secondary/Secondary > 6 mm
Creep page Secondary/Secondary > 14 mm

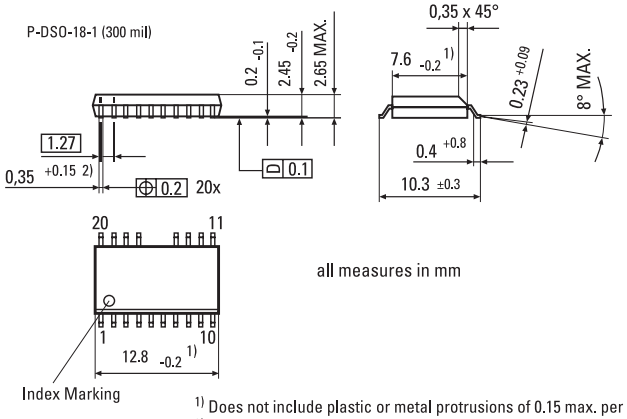


1) Does not include plastic or metal protrusions of 0.15 max. per side
2) Does not include dambar protrusion of 0.05 max. per side

радиодетали электронные компоненты со склада и под заказ

# Mounting Hardware for EasyPIM™, EasyPACK, EasyBRIDGE and EasyDUAL Modules

| | Suitable for | Type | Outline | Part-No. |
|---|---|---|---|---|
| 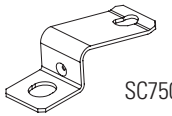 SC750 | Easy750 housing | ScrewClamp Easy750 | SC750 | 24126 |
| | Easy750housing | IsolationCap Easy750 | IC750 | 27332 |
| SC1 | Easy1 housing | ScrewClamp Easy1 | SC1 | 23088 |
| SC2 | Easy2 housing | ScrewClamp Easy2 | SC2 | 23089 |

IC750

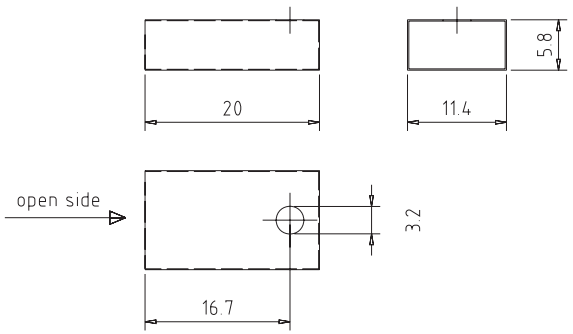


SC750

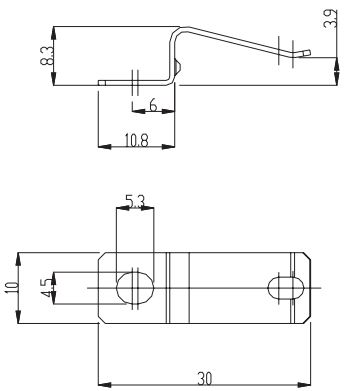


SC1

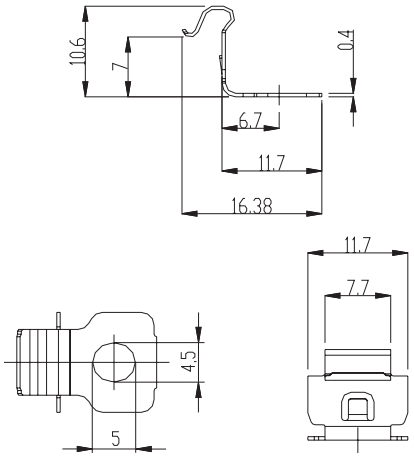


SC2

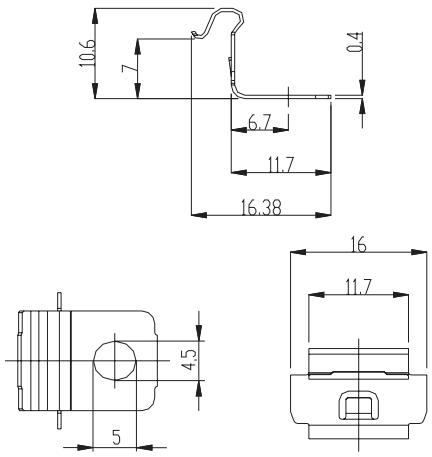

г.Минск тел.8(017)2005646 www.fotorele.net модули EUPEC IGBT Infineon minsk17@tut.by



# Gate Leads for PowerBLOCK Thyristor Modules

Gate leads must be ordered separately

| Baseplate | connection to | connection to | color | length [mm] | Part.no | Outline |
|---|---|---|---|---|---|---|
| 30 mm | 5 / 4 | G1/HK1 | G yellow / HK red | 250 | 28118 | LZ 5 |
| | 6 / 7 | G2/HK2 | G yellow / HK red | 250 | 28119 | LZ 6 |
| 34, 50, 60 mm | 5 / 4 | G1/K1 | G yellow / HK red | 250 | 28128 | LZ 5 |
| | 6 / 7 | G2/K2 | G yellow / HK red | 250 | 28129 | LZ 6 |
| 50 mm Single | 5 / 4 | G1/K1 | G yellow / HK red | 250 | 28128 | LZ 5 |
| 70 mm | 5 / 4 | G1/K1 | G yellow / HK red | 250 | 28128 | LZ 5 |
| 34, 50, 60 mm | 5 / 4 | G1/K1 | G yellow / HK red | 470 | 28133 | LZ 5 |
| | 6 / 7 | G2/K2 | G yellow / HK red | 470 | 28134 | LZ 6 |
| 50 mm Single | 5 / 4 | G1/K1 | G yellow / HK red | 470 | 28133 | LZ 5 |
| 70 mm | 5 / 4 | G1/K1 | G yellow / HK red | 470 | 28133 | LZ 5 |

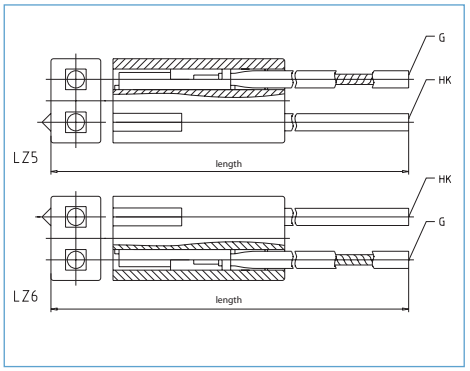


lead material: silicon cord type SiFF 0,5mm²

# Mounting Hardware for Modules

| Type | Content | Quantity | Part-No. |
|---|---|---|---|
| IsoPACK™ 42 | M5x11 | 30 | 4195 |
| IsoPACK™ 54 | M6x15 | 30 | 4210 |

радиодетали электронные компоненты со склада и под заказ

# Standard Gate Leads for Disc Type Devices

Leads and gate leads must be ordered separately

| Disc outline/page | Material | Mat. no. | Connection | Color | Length mm | |
|---|---|---|---|---|---|---|
| T41.14/103 | epoxy | 2385 | HK | red | 235 | 1) |
| T50.14/103 | | 2386 | G | yellow | 235 | |
| T60.14/103 | epoxy | 2387 | HK | red | 235 | 1) |
| T75.14/103 | | 2386 | G | yellow | 235 | |
| T57.26/103 | | | | | | |
| T75.26/103 | | | | | | |
| T100.26/103 | | | | | | |
| T100.35/103 | | | | | | |
| T110.26/104 | | | | | | |
| T110.35/104 | | | | | | |
| T60.14/103 | epoxy | 12511 | HK | red | 600 | 2) |
| T75.14/103 | | 12510 | G | yellow | 600 | |
| T57.26/103 | | | | | | |
| T75.26/103 | | | | | | |
| T100.26/103 | | | | | | |
| T100.35/103 | | | | | | |
| T110.26/104 | | | | | | |
| T110.35/104 | | | | | | |
| T57.26K/104 | ceramic | 2387 | HK | red | 235 | 1) |
| T58.26K/104 | | 2386 | G | yellow | 235 | |
| T75.26K/104 | | | | | | |
| T76.26K/104 | | | | | | |
| T76.35K/104 | | | | | | |
| T57.26K/104 | ceramic | 12511 | HK | red | 600 | 2) |
| T58.26K/104 | | 12510 | G | yellow | 600 | |
| T75.26K/104 | | | | | | |
| T76.26K/104 | | | | | | |
| T76.35K/104 | | | | | | |
| T120.26K/105 | ceramic | 14232 | HK | red | 1000 | 2) |
| T120.35K/105 | | 14231 | G | white | 1000 | |
| T150.26K/105 | | | | | | |
| T150.35K/105 | | | | | | |
| T172.35K/105 | | | | | | |

1) with plug 6,3 x 1 mm at the free ends – lead material: silicon cord type SiFF 0,5 $mm^2$
2) without plug at the free ends – lead material: teflon cord type FEP 0,5 $mm^2$



радиодетали электронные компоненты со склада и под заказ

г.Минск тел.8(017)2005646 www.fotorele.net модули EUPEC IGBT Infineon minsk17@tut.by



# Clamping Force (kN) and Disc Diameter (mm)

| Phase control thyristors | | | Phase control thyristors | | | Phase control thyristors | | | Fast thyristors | | |
|---|---|---|---|---|---|---|---|---|---|---|---|
| Typ | kN | mm | Typ | kN | mm | Typ | kN | mm | Typ | kN | mm |
| T 178 N | 2,5 - 5 | 41 | T 739 N | 15 - 24 | 75 | T 2001 N | 36 - 52 | 120 | Fast Thyristors | | |
| T 201 N | 7 - 12 | 58 | T 821 N | 27 - 40 | 100 | T 2009 N | 36 - 52 | 110 | | | |
| T 218 N | 2,5 - 5 | 41 | T 828 N | 5,5 - 8 | 50 | T 2101 N | 36 - 52 | 120 | T 128 F | 3 - 6 | 41 |
| T 298 N | 3 - 6 | 41 | T 829 N | 12 - 29 | 75 | T 2156 N | 42 - 95 | 110 | T 178 F | 1,5 - 2,5 | 41 |
| T 308 N | 5 - 10 | 50 | T 860 N | 20 - 45 | 74 | T 2159 N | 42 - 95 | 110 | T 188 F | 3 - 6 | 41 |
| T 348 N | 2,5 - 5 | 41 | T 869 N | 20 - 45 | 75 | T 2160 N | 42 - 95 | 120 | T 308 F | 2,5 - 5 | 41 |
| T 358 N | 4 - 8 | 41 | T 878 N | 10,5 - 21 | 60 | T 2161 N | 45 - 65 | 120 | T 318 F | 5,5 - 10 | 50 |
| T 378 N | 4 - 8 | 41 | T 879 N | 10,5 -21 | 57 | T 2351 N | 45 - 65 | 120 | T 408 F | 5 - 10 | 50 |
| T 379 N | 10,5 - 21 | 57 | T 901 N | 15 - 24 | 75 | T 2401 N | 63 - 91 | 150 | T 599 F | 9 - 18 | 57 |
| T 380 N | 7,5 - 17,5 | 56 | T 909 N | 15 - 24 | 75 | T 2476 N | 42 - 95 | 110 | T 600 F | 9 - 18 | 56 |
| T 388 N | 5 - 10 | 50 | T 929 N | 20 - 45 | 75 | T 2479 N | 42 - 95 | 110 | T 698 F | 5,5 - 11 | 50 |
| T 398 N | 3 - 6 | 41 | T 1039 N | 16 - 32 | 75 | T 2480 N | 42 - 95 | 120 | T 930 S | 16 - 32 | 74 |
| T 399 N | 7,5 - 17,5 | 57 | T 1049 N | 12 - 24 | 75 | T 2509 N | 24 - 56 | 75 | T 1052 S | 16 - 32 | 74 |
| T 458 N | 7,5 - 17,5 | 60 | T 1078 N | 8 - 16 | 50 | T 2563 N/T 2563 NH | 90 - 130 | 170 | T 1078 F | 8 - 16 | 50 |
| T 459 N | 7,5 - 17,5 | 57 | T 1081 N | 36 - 52 | 120 | T 2709 N | 42 - 95 | 110 | | | |
| T 501 N | 15 - 24 | 75 | T 1101 N | 27 - 40 | 100 | T 2710 N | 42 - 95 | 120 | | | |
| T 508 N | 5 - 10 | 50 | T 1189 N | 16 - 32 | 75 | T 2851 N/T3441 N | 63 - 91 | 150 | Fast Asymmetric Thyristors | | |
| T 509 N | 5 - 10 | 57 | T 1201 N | 36 - 52 | 120 | T 2871 N | 90 - 130 | 120 | | | |
| T 551 N | 15 - 24 | 75 | T 1218 N | 20 - 45 | 75 | T 3101 N | 63 - 91 | 150 | A 158 S | 2,5 - 4,5 | 41 |
| T 553 N | 15 - 24 | 75 | T 1219 N | 20 - 45 | 75 | T 3159 N | 42 - 95 | 110 | A 198 S | 2,5 - 4,5 | 41 |
| T 568 N | 4 - 8 | 41 | T 1258 N | 12 - 24 | 60 | T 3401 N/T 3801 N | 63 - 91 | 150 | A 358 S | 4,5 - 9 | 50 |
| T 588 N | 6 - 12 | 50 | T 1329 N | 20 - 45 | 75 | T 3441 N | 63 - 91 | 150 | A 438 S | 4,5 - 9 | 50 |
| T 589 N | 6 - 12 | 57 | T 1401 N | 36 - 52 | 120 | T 3709 N | 30 - 65 | 100 | | | |
| T 618 N | 6 - 12 | 50 | T 1451 N | 36 - 52 | 120 | T 3801 N | 63 - 91 | 150 | | | |
| T 619 N | 6 - 12 | 57 | T 1500 N | 24 - 56 | 74 | T 4021 N | 90 - 130 | 170 | | | |
| T 639 N | 9 - 18 | 57 | T 1503 N/T 1503 NH | 63 - 91 | 150 | T 4003 N/T 4003 NH | 90 - 130 | 170 | | | |
| T 648 N | 9 - 18 | 50 | T 1509 N | 24 - 56 | 75 | T 4301 N | 63 - 91 | 150 | | | |
| T 649 N | 9 - 18 | 57 | T 1551 N | 36 - 52 | 120 | T 4771 N | 63 - 91 | 150 | | | |
| T 658 N | 10,5 - 21 | 60 | T 1589 N | 30 - 65 | 100 | | | | | | |
| T 659 N | 10,5 - 21 | 57 | T 1601 N | 36 - 52 | 120 | | | | | | |
| T 699 N | 10,5 - 21 | 57 | T 1851 N/T 1651 N | 45 - 65 | 120 | | | | | | |
| T 708 N | 10,5 - 21 | 60 | T 1866 N | 30 - 65 | 100 | | | | | | |
| T 709 N | 12 - 29 | 75 | T 1869 N | 30 - 65 | 100 | | | | | | |
| T 718 N | 9 - 18 | 60 | T 1901 N/T 2251 N | 63 - 91 | 150 | | | | | | |
| T 719 N | 9 - 18 | 57 | T 1929 N | 42 - 95 | 110 | | | | | | |
| T 729 N | 18 - 43 | 75 | T 1971 N | 36 - 52 | 120 | | | | | | |
| T 730 N | 18 - 43 | 75 | T 1986 N | 30 - 65 | 100 | | | | | | |
| T 731 N | 15 - 24 | 75 | T 1989 N | 30 - 65 | 100 | | | | | | |

радиодетали электронные компоненты со склада и под заказ

г.Минск тел.8(017)2005646 www.fotorele.net модули EUPEC IGBT Infineon minsk17@tut.by

# Clamping Force (kN) and Disc Diameter (mm)

| Rectifier diodes | | | Rectifier diodes | | | Fast rectifier diodes | | | Fast rectifier diodes | | |
|---|---|---|---|---|---|---|---|---|---|---|---|
| Typ | kN | mm | Typ | kN | mm | Typ | kN | mm | Typ | kN | mm |
| D 269 N | 3,2 - 7,6 | 57 | D 5809 N | 30 - 60 | 75 | D 138 S | 1,7 - 3,4 | 41 | D 1408 S | 18 - 50 | 75 |
| D 428 N | 3,2 - 7,6 | 41 | D 6001 N | 55 - 91 | 150 | D 178 S | 1,7 - 3,4 | 41 | D 1461 S | 27 - 45 | 100 |
| D 448 N | 2,6 - 4,6 | 41 | D 6247 N | 30 - 45 | 60 | D 188 S | 1,7 - 3,4 | 41 | D 1951 SH | 55 - 91 | 150 |
| D 471 N | 10 - 16 | 58 | D 8019 N | 40 - 80 | 100 | D 228 S | 3,2 - 7,6 | 41 | | | |
| D 660 N | 6,1 - 14,7 | 41 | D 8407 N | 40 - 60 | 73 | D 238 S | 3,2 - 7,6 | 41 | | | |
| D 711 N | 10 - 16 | 58 | | | | D 291 S | 9 - 13 | 58 | | | |
| D 748 N | 6,1 - 14,7 | 50 | 25 DN 06 | 4 - 8 | 25 | D 348 S | 3,2 - 7,6 | 41 | | | |
| D 749 N | 10 - 24 | 57 | 38 DN 06 | 20 - 30 | 38 | D 358 S | 3,2 - 7,6 | 41 | | | |
| D 758 N | 3,2 - 7,6 | 41 | 46 DN 06 | 30 - 45 | 46 | D 368 S | 3,2 - 7,6 | 41 | | | |
| D 798 N | 6 - 14,7 | 50 | 46 DN 06 S 01 | 30 - 45 | 46 | D 371 S | 10 - 16 | 58 | | | |
| D 849 N | 10 - 24 | 57 | 56 DN 06 | 40 - 60 | 56 | D 438 S | 4,8 - 11,4 | 41 | | | |
| D 850 N | 10 - 24 | 56 | 56 DN 06 S0 1 | 40 - 60 | 56 | D 440 S | 4,8 - 11,4 | 56 | | | |
| D 1029 N | 10 - 24 | 57 | 65 DN 06 | 55 - 80 | 65 | D 509 S | 6 - 14,5 | 57 | | | |
| D 1030 N | 10 - 24 | 56 | 65 DN 06 S 01 | 55 - 80 | 65 | D 648 S | 6 - 14,5 | 50 | | | |
| D 1049 N | 10 - 24 | 57 | | | | D 649 S | 6 - 14,5 | 57 | | | |
| D 1069 N | 14 - 34 | 75 | | | | D 658 S | 6 - 14,5 | 50 | | | |
| D 1481 N | 15 - 36 | 75 | D 2201 N | 27 - 45 | 100 | D 659 S | 6 - 14,5 | 57 | | | |
| D 1709 N | 12 - 24 | 75 | | | | D 675 S | 10 - 24 | 56 | | | |
| D 1800 N | 24 - 60 | 74 | | | | D 689 S | 10 - 24 | 57 | | | |
| D 1809 N | 24 - 60 | 75 | | | | D 690 S | 10 - 24 | 57 | | | |
| D 2151 N | 27 - 45 | 100 | | | | D 721 S | 15 - 36 | 75 | | | |
| D 2200 N | 24 - 60 | 74 | | | | D 801 S | 15 - 36 | 75 | | | |
| D 2001 N | 27 - 45 | 100 | | | | D 841 S | 15 - 36 | 75 | | | |
| D 2209 N | 24 - 60 | 75 | | | | D 901 S | 27 - 45 | 100 | | | |
| D 2228 N | 12 - 24 | 60 | | | | D 911 SH | 27 - 45 | 100 | | | |
| D 2601 N/D 2601 NH | 36 - 52 | 120 | | | | D 921 S | 27 - 45 | 100 | | | |
| D 2650 N | 24 - 60 | 74 | | | | D 931 SH | 27 - 45 | 100 | | | |
| D 2659 N | 24 - 60 | 75 | | | | D 1031 SH | 27 - 45 | 100 | | | |
| D 2898 N | 12 - 24 | 60 | | | | D 1131 SH | 36 - 52 | 120 | | | |
| D 3001 N/D 3041 N | 36 - 52 | 120 | | | | D 1169 S | 18 - 50 | 75 | | | |
| D 3501 N | 36 - 52 | 120 | | | | D 1170 S | 8 - 50 | 74 | | | |
| D 4201 N | 36 - 52 | 120 | | | | D 1251 S | 15 - 36 | 75 | | | |
| D 4457 N | 30 - 45 | 60 | | | | D 1121 SH | 36 - 52 | 120 | | | |
| D 4709 N | 42 - 95 | 110 | | | | D 1331 SH | 36 - 52 | 120 | | | |
| D 5807 N | 40 - 60 | 72 | | | | D 1381 S | 27 - 45 | 100 | | | |



радиодетали электронные компоненты со склада и под заказ

г.Минск тел.8(017)2005646 www.fotorele.net модули EUPEC IGBT Infineon minsk17@tut.by



# Letter Symbols/Kurzzeichen

| | | |
|---|---|---|
| B | DC current gain | Kollektor-Basis-Gleichstromverhltn. |
| FBSOA | forward biased safe operating area | Sicherer Vorwärts-Arbeitsbereich |
| f | frequency | Frequenz |
| $f_o$ | repetition frequency | Wiederholfrequenz |
| F | clamping force | Anpresskraft |
| G | weight | Gewicht |
| $I_C$ | maximum permissible DC collector current | höchstzulässiger Dauergleichstrom |
| $I_{CAVM}$ | maximum permiss. average collector current | Kollektor-Dauergrenzstrom |
| $I_{CES}$ | collector-emitter cut-off current | Kollektor-Emitter-Reststrom |
| $I_{GES}$ | gate-leakage current | Gate-Emitter Reststrom |
| $I_{EGS}$ | gate-leakage current | Emitter-Gate Reststrom |
| $i_{CBO}$ | collector-base cut-off current | Kollektor-Basis-Reststrom |
| $I_{CRM}$ | permissible repetitive peak collector current | höchstzulässiger periodischer Kollektor-Spitzenstrom |
| $i_{EBO}$ | emitter-base cut-off current | Emitter-Basis-Reststrom |
| $i_{FB}$ | forward base current | Vorwärts-Basisstrom |
| $I_{FB}$ | maximum permissible peak forward current | höchstzul. Vorwärts-Basis-Spitzenstrom |
| $i_{RB}$ | reverse base current | Rückwärts-Basisstrom |
| $I_{RB}$ | maximum perm. peak reverse base current | höchstzulässiger Rückwärts-Basis-Spitzenstrom |
| $i_D$ | forward off-state current | Vorwärts-Sperrstrom |
| $i_G$ | gate current | Steuerstrom |
| $I_{GD}$ | gate non trigger current | nicht zündender Steuerstrom |
| $i_{GM}$ | peak gate current | Spitzensteuerstrom |
| $I_{GT}$ | gate trigger current | Zündstrom |
| $I_H$ | holding current | Haltestrom |
| $I_L$ | latching current | Einraststrom |
| $i_R$ | reverse current | Rückwärts-Sperrstrom |
| $I_{RMS}$ | RMS current | Strom-Effektivwert |
| $I_{RM}$ | peak reverse recovery current | Rückstromspitze |
| $i_T/i_F$ | on-state current | Durchlassstrom |
| $I_{TAV}/I_{FAV}$ | on-state current (average value) | Durchlassstrom (Mittelwert) |
| $I_{TAVM}/I_{FAVM}$ | maximum average on-state current | Dauergrenzstrom |
| $I_{TINT}/I_{FINT}$ | on-state current at intermittent duty | Durchlassstrom bei Aussetzbetrieb |
| $I_{TM}/I_{FM}$ | on-state current (peak value) | Durchlassstrom (Spitzenwert) |
| $I_{T(OV)}/I_{F(OV)}$ | on-state current at shorttime duty | Überstrom bei Kurzzeitbetrieb |
| $I_{T(OV)M}/I_{F(OV)M}$ | maximum overload on-state current | Grenzstrom |

| | | |
|---|---|---|
| $I_{T(RC)M}$ | repetitive turn-on current (from snubber) | periodischerEinschaltstrom (aus RC) |
| $I_{TRMSM}/I_{FRMSM}$ | maximum RMS on-state current | Durchlassstrom-Grenzeffektivwert |
| $I_{TSM}/I_{FSM}$ | surge non repetitive on-state current | Stoßstrom-Grenzwert |
| $I_{F(max)}$ | DC forward current | Dauergleichstrom |
| $I_{FRM}$ | repetitve peak forward current | Periodischer Spitzenstrom |
| $\int i^2\,dt$ | maximum rated value | Grenzlastintegral |
| $di_G/dt$ | rate of rise of gate current | Steilheit des Steuerstromes |
| $di_T/dt/di_F/dt$ | rate of rise of on-state current | Steilheit des Durchlassstromes |
| $(di/dt)_{cr}$ | critical rate of rise of on-state current | kritische Stromsteilheit |
| L | inductance | Induktivität |
| M | tightening torque | Anzugsdrehmoment |
| $P_{ON}$ | turn-on dissipation | Einschaltverlustleistung |
| $P_{OFF}$ | turn-off dissipation | Ausschaltverlustleistung |
| P | power dissipation | Verlustleistung |
| $P_D$ | forward off-state dissipation | Vorwärts-Sperrverlustleistung |
| $P_G$ | gate dissipation | Steuerverlustleistung |
| $P_R$ | reverse power dissipation | Rückwärts-Sperrverlustleistung |
| $P_{RQ}$ | turn-off dissipation | Ausschaltverlustleistung |
| $P_{TT} + P_{RQ}$ | switching dissipation | Schaltverlustleistung |
| $P_T/P_F$ | on-state power dissipation | Durchlassverlustleistung |
| $P_{TAV}/P_{FAV}$ | on-state power dissipation (average value) | Durchlassverlustleistung (arithmetischer Mittelwert) |
| $P_{TT}$ | turn-on dissipation | Einschaltverlustleistung |
| $P_{tot}$ | total power dissipation | Gesamtverlustleistung |
| $Q_r$ | recovered charge | Sperrverzugsladung |
| $Q_s$ | lag charge | Nachlaufladung |
| R | resistance | Widerstand |
| $r_T$ | slope resistance | Ersatzwiderstand |
| $R_{thCA}$ | thermal resistance, case to coolant | Wärmewiderstand Gehäuse-Kühlmittel |
| $R_{thCK}$ | thermal resistance, case to heatsink | Übergangs-Wärmewiderstand |
| $R_{thJA}$ | thermal resistance, junction to coolant | Gesamtwärmewiderstand |
| $R_{thJC}$ | thermal resistance, junction to case | innerer Wärmewiderstand |
| RBSOA | reverse biased safe operating area | Sicherer Rückwärts-Arbeitsbereich |
| t | time | Zeit |
| T | period | Periodendauer |
| $T_A$ | coolant temperature | Kühlmitteltemperatur |
| $T_C$ | case temperature | Gehäusetemperatur |

радиодетали электронные компоненты со склада и под заказ

г.Минск тел.8(017)2005646 www.fotorele.net модули EUPEC IGBT Infineon minsk17@tut.by

# Letter Symbols/Kurzzeichen

| | | |
|---|---|---|
| $T_{cop}$ | operating temperature | Betriebstemperatur |
| $t_g$ | trigger pulse duration | Steuerimpulsdauer |
| $t_{gd}$ | gate controlled delay time | Zündverzug |
| $T_h$ | heatsink temperature | Kühlkörpertemperatur |
| $t_p$ | current pulse duration (sinusoidal) | Strompulsdauer (Sinusform) |
| $t_q$ | circuit commutated turn-off time | Freiwerdezeit |
| $t_{rr}$ | reverse recovery time | Sperrverzugszeit |
| $T_{vj}$ | junction temperature | Sperrschichttemperatur |
| $T_{vj\,max}$ | maximum permissible junction temperature | höchstzul. Sperrschichttemperatur |
| $t_w$ | current pulse duration (trapezoidal) | Stromflusszeit (Trapezform) |
| $t_f$ | fall time | Fallzeit |
| $t_{fb\,min}$ | minimum duration of forward base current | Mindestdauer des Vorwärtsbasisstroms |
| $t_{off}$ | turn-off time | Abschaltzeit |
| $t_{on}$ | turn-on time | Einschaltzeit |
| $t_s$ | storage time | Speicherzeit |
| $T_{vj\,op}$ | operating temperature | Betriebstemperatur |
| $T_{st}$ | storage temperature | Lagertemperatur |
| $v_D$ | forward off-state voltage | Vorwärts-Sperrspannung |
| $v_{DM}$ | forward off-state voltage (peak value) | Vorwärts-Sperrspanng (Spitzenwert) |
| $V_{DRM}$ | repetitive peak forward off-state voltage | periodische Vorwärtsspitzenspannung |
| $V_{DSM}$ | non-repetitive peak forward off-state voltage | Vorwärts-Stoßspitzenspannung |
| $v_G$ | gate voltage | Steuerspannung |
| $V_{GD}$ | gate non trigger voltage | nicht zündende Steuerspannung |
| $V_{GE\,(th)}$ | gate threshold voltage | Gate-Schwellenspannung |
| $V_{GT}$ | gate trigger voltage | Zündspannung |
| $V_{ISOL}$ | insulation test voltage | Isolat.-Prüfspannung |
| $v_L$ | no-load voltage of trigger pulse generator | Leerlaufspannung des Steuergenerators |
| $v_R$ | reverse voltage | Rückwärts-Sperrspannung |

| | | |
|---|---|---|
| $V_R$ | direct reverse voltage | Rückwärts-Gleichsperrspannung |
| $V_{RG}$ | reverse gate voltage | Rückwärts-Steuerspannung |
| $V_{RGM}$ | peak reverse gatevoltage | Rückwärts-Spitzensteuerspannung |
| $v_{RM}$ | reverse voltage (peak value) | Rückwärts-Sperrspannung (Spitzenw.) |
| $V_{RMS}$ $V_{DC}$ | RMS or DC voltage value | Bemessungsspannung Effektivwert/Gleichspannung |
| $V_{RRM}$ | repetitive reverse voltage | periodische Rückwärts-Spitzensperrspannung |
| $V_{RRM(C)}$ | repetitive peak reverse voltage after commutation | periodische Spitzensperrspannung nach der Kommutierung |
| $V_{RSM}$ | non-repetitive peak reverse voltage | Rückwärts-Stoßspitzenspannung |
| $v_T/v_F$ | on-state voltage | Durchlassspannung |
| $V_{(TO)}$ | threshold voltage | Schleusenspannung |
| $V_M$ | repetitive peak voltage | periodische Spitzensperrspannung |
| $V_{CE\,sat}$ | collector-emitter saturation emitter voltage | Kollektor-Emitter-Sättigungsspannung |
| $V_{CES,}$ $V_{CE}$ | maximum permissible collector-voltage | höchstzulässige Kollektor-Emitter-Sperrspannung |
| $dv_D/dt$ | rate of rise of forward off-state voltage | Steilheit der Vorwärts-Spannung |
| $dv_R/dt$ | rate of rise of reverse voltage | Steilheit der Rückwärts-Spannung |
| $(dv/dt)_{cr}$ | critical rate of rise of off-state voltage | kritische Spannungssteilheit |
| $V_L$ | air quantity | Luftmenge |
| $V_W$ | water quantity | Wassermenge |
| $W$ | energy | Verlustenergie |
| $W_{tot}$ | total energy | Gesamtverlustenergie |
| $Z_{thCA}$ | transient thermal impedance, case to coolant | transienter äußerer Wärmewiderstand |
| $Z_{thJA}$ | transient thermal impedance, junction to coolant | transienter Gesamtwärmewiderstand |
| $Z_{thJC}$ | transient thermal impedance, junction to case | transienter innerer Wärmewiderstand |
| $\Theta$ | current conduct. angle | Stromflusswinkel |



радиодетали электронные компоненты со склада и под заказ

г.Минск тел.8(017)2005646 www.fotorele.net модули EUPEC IGBT Infineon minsk17@tut.by



# Type designations

## Presspacks

T 930 S 18 T M C

| | |
|---|---|
| T | thyristor |
| D | diode |
| A | asymmetric thyristor |
| 930 | average on state current (A) |
| 0 | standard ceramic disc |
| 1 | high power ceramic disc |
| 4 | epoxy disc 19 mm high |
| 6 | epoxy disc 35 mm high |
| 7 | epoxy disc 8 mm high |
| 8 | epoxy disc 14 mm high |
| 9 | epoxy disc 26 mm high |
| 3 | light triggered thyristor, ceramic disc |
| N | phase control device |
| K | phase control diode with cathode on case (only flatbase or metric) |
| F | fast thyristor with central gate |
| S | fast thyristor with distributed gate, fast diode |
| U | fast diode with cathode on case (only flatbase or metric) |
| A | avalanche diode |
| B | avalanche diode with cathode on case (only flatbase or metric) |
| NH | Diode: soft recovery for high current pulses<br>Thyristor: high turn-on di/dt capability |
| SH | softrecovery diode |
| 18 | repetitive peak off-state and reverse voltage in $10^2$ V |
| B | metric thread with cable |
| C | metric thread with solder pin |
| E | flat base |
| T | disc |
| | turn-off time: |
| A | 8 µs |
| B | 10 µs |
| C | 12 µs |
| D | 15 µs |
| S | 18 µs |
| E | 20 µs |
| F | 25 µs |
| G | 30 µs |
| K | 40 µs |
| M | 50 µs |
| P | 55 µs |
| N | 60 µs |
| T | 80 µs |

T 930 S 18 T M C

| | |
|---|---|
| U | 120 µs |
| O | no guaranteed turn off time |
| 1 | on request |
| 2 | on request |
| | critical rate of off-state voltage |
| B | 50 V/µs |
| C | 500 V/µs |
| F | 1000 V/µs |
| G | 1500 V/µs |
| H | 2000 V/µs |
| B01...n | contruction variation |
| S01...n | electrical selection |

## PowerBLOCK Modules

TT 162 N 16 K O F-K

| | |
|---|---|
| TT | with 2 thyristors |
| DD | with 2 diodes |
| ND, DZ, TZ | with 1 thyristor or 1 diode |
| TD, DT | with 1 thyristor and 1 diode |
| AD | with 1 asymmetric thyristor and 1 diode |
| 162 | average on state current (A) |
| N | phase control device |
| F | fast thyristor with central gate |
| S | fast thyristor with gate cathode interdigitated, fast diode |
| 16 | repetitive peak off-state and reverse voltage in $10^2$ V |
| K | mechanical construction: module |
| O | turn off time (see disk devices) |
| F | critical rate of rise of off-state voltage (see disk devices) |
| -K | design with common cathode |
| -A | design with common anode |
| B01...n | construction variation |
| S01...n | electrical selection |

## IGBT Modules

FF 400 R 33 KF x

| | |
|---|---|
| FF | example for a High-Power-Module |
| FZ | single switch with one IGBT and FWD |
| FF | half bridge (two IGBTs an FWDs) |
| FP | Power Integrated Module |
| FM | Matrix Module |
| FD/DF | chopper module |
| FB | Power Integrated Module with B4 rectifier |
| DD | dual diode module |
| F4 | 4-pack |
| FS | 3 phase full bridge (6-pack) |
| 400 | max. DC-collector current (A) |
| R | reverse conducting |
| S | fast Diode |
| 33 | collector-emitter-voltage in $10^2$ V |
| K/V/X/Y | mechanical construction: module |
| F | fast switching type |
| L | type with low $v_{CEsat}$ |
| S | fast short tail IGBT Chip |
| E | low sat IGBT Chip |
| T | thin IGBT[3] |
| 1 ... n | internal reference numbers |
| C | EmCon Diode |
| D | higher Diode current |
| -K | design with common cathode |
| G | module in big housing |
| I | integrated cooling |
| B1 ... n | Construction variation |
| S1 ... n | Electrical selection |

BSM 100 GB 120 DL x

| | |
|---|---|
| BSM | example for a standard module |
| BSM | switch with IGBT and FWD |
| BYM | diode module |
| 100 | max. DC-collector current (A) |
| GA | single switch with one IGBT and FWD |
| GB | half bridge (two IGBTs and FWDs) |
| GD | 3 phase full bridge (6-pack) |
| GT | 3 single switches an FWDs (Tripack) |

BSM 100 GB 120 DL x

| | |
|---|---|
| GP | Power Intergrated Module B6/Break/Inverter |
| GAL | chopper module (diode on collector side) |
| GAR | chopper module (diode on emitter side) |
| A | single diode |
| 120 | collector-emitter-voltage in $10^1$ V |
| DL | Typ with low $v_{CEsat}$ |
| DN2 | fast switching type |
| DLC | low loss type with EmCon Diode |
| S | with collector sense |
| G | Design Variation |
| Exxx | special type |

## Bridge Rectifiers and AC-Switches

TD B6 H K 135 N 16 L OF

| | |
|---|---|
| DD | diode module |
| TT | thyristor module |
| TD | thyristor/diode |
| B6 | three phase bridge |
| W3 | three phase AC-switch |
| C | fully controlled |
| H | half controlled |
| U | uncontrolled |
| K | common cathode of thyristors |
| 105 | output current (A) (W3C: RMS-current) |
| N | phase control thyristor/diode |
| 16 | repetitive peak off-state voltage in 100 V |
| L | IsoPACK |
| R | EconoBRIDGE without integr. brake chopper IGBT |
| RR | EconoBRIDGE with integr. brake chopper IGBT |
| O | no guaranteed turn-off time |
| F | critical rate of rise of off-state voltage |

радиодетали электронные компоненты со склада и под заказ

г.Минск тел.8(017)2005646 www.fotorele.net модули EUPEC IGBT Infineon minsk17@tut.by

# Typenbezeichnungen

## Scheibenbauelemente

T 930 S 18 T M C

| | |
|---|---|
| T | Thyristor |
| D | Diode |
| A | asymmetrischer Thyristor |
| 930 | Dauergrenzstrom (A) |
| 0 | Standardkeramik-Scheibe |
| 1 | Hochleistungskeramik-Scheibe |
| 4 | Epoxy-Scheibe 19mm hoch |
| 6 | Epoxy-Scheibe 35mm hoch |
| 7 | Epoxy-Scheibe 8mm hoch |
| 8 | Epoxy-Scheibe 14mm hoch |
| 9 | Epoxy-Scheibe 26mm hoch |
| 3 | lichtgezündeter Thyristor, Keramik-Scheibe |
| N | Netz-Bauelement |
| K | Netz-Diode mit Kathode am Gehäuse (nur Flachboden oder Gewindebolzen) |
| F | schneller Thyristor mit Zentralgate |
| S | schneller Thyristor mit verzweigtem Gate, schnelle Diode mit Aode am Gehäuse |
| U | schnelle Diode mit Kathode am Gehäuse (nur Flachboden oder Gewindebolzen) |
| A | Avalanche Diode mit Kathode am Gehäuse (nur Flachboden oder Gewindebolzen) |
| B | Avalanche Diode mit Kathode am Gehäuse (nur Flachboden oder Gewindebolzen) |
| NH | Diode mit softrecovery Verhalten für hohe Strompulse |
| | Thyristor zum einschalten von hohen Stromanstiegen |
| SH | Diode mit softrecovery Verhalten |
| 18 | periodische Vorwärts- und Rückwärts-Spitzensperrspannung in $10^2$V |
| B | mit metrischem Gewinde u. Seil |
| C | mit metrischem Gewinde u. Lötöse |
| E | Flachboden |
| T | Scheibe |
| | Freiwerdezeit |
| A | 8µs |
| B | 10µs |
| C | 12µs |
| D | 15µs |
| S | 18µs |
| E | 20µs |
| F | 25µs |

T 930 S 18 T M C

| | |
|---|---|
| G | 30µs |
| K | 40µs |
| M | 50µs |
| P | 55µs |
| N | 60µs |
| T | 80µs |
| U | 120µs |
| 0 | keine garantierte Freiwerdezeit |
| 1 | auf Anfrage |
| 2 | auf Anfrage |
| | kritische Spannungssteilheit: |
| B | 50V/µs |
| C | 500V/µs |
| F | 1000V/µs |
| G | 1500/µs |
| H | 2000V/µs |
| B01...n | Konstruktionsvariante |
| S01...n | elektrische Selektion |

## PowerBLOCK Module

TT 162 N 16 K O F-K

| | |
|---|---|
| TT | mit 2 Thyristoren |
| DD | mit 2 Dioden |
| ND, DZ, TZ | mit 1 Thyristor oder 1 Diode |
| TD, DT | mit 1 Thyristor und 1 Diode |
| AD | mit 1 asymmetrischen Thyristor und 1 Diode |
| 162 | Dauergrenzstrom (A) |
| N | Netz-Element |
| F | schneller Thyristor mit Zentralgate |
| S | schneller Thyristor mit verzweigtem Gate, schnelle Diode |
| 16 | periodische Vorwärts- und Rückwärts-Spitzensperrspannung in $10^2$V |
| K | mech. Ausführung: Modul |
| O | Freiwerdezeit (siehe Scheibenbauelemente) |
| F | kritische Spannungssteilheit (siehe Scheibenbauelemente) |
| -K | Ausführung mit gem. Kathode |
| -A | Ausführung mit gem. Anode |
| B01...n | Konstruktionsvariante |
| S01...n | elektrische Sonderspezifikation |

## IGBT Module

FF 400 R 33 KF x

| | |
|---|---|
| | Beispiel für ein Hochleistungsmodul |
| FZ | Einzelschalter mit IGBT und Freilaufdiode |
| FF | Halbbrücke (zwei IGBT's und Freilaufdioden) |
| FP | Integriertes Modul mit IGBT, NTC, B6, Chopper |
| FM | Matrix Module |
| FD/DF | Choppermodul |
| FB | Integriertes Modul mit IGBT, NTC, und B4 |
| DD | Doppeldiodenmodul |
| F4 | Halbbrücke |
| FS | Vollbrücke |
| 400 | max. Kollektor-Dauergleichstrom (A) |
| R | rückwärts leitend |
| S | schnelle Diode |
| 33 | Kollektor-Emitter-Sperrspannung in $10^2$ V |
| K/V/X/Y | mechanische Ausführung: Modul |
| F | schnell schaltender Typ |
| L | Typ mit niedriger $v_{CEsat}$ |
| S | schneller short Tail IGBT Chip |
| E | sehr kleine Schwellenspannung IGBT |
| T | thin IGBT[3] |
| 1 ... n | interne Referenznummer |
| C | EmCon Diode |
| D | größerer Dioden Strom |
| -K | Design mit common Kathode |
| G | Modul im größeren Gehäuse |
| I | mit integrierter Kühlung |
| B1 ... n | konstruktive Variationen |
| S1 ... n | elektrische Selektion |

BSM 100 GB 120 DL x

| | |
|---|---|
| | Beispiel für ein Standardmodul |
| BSM | Schalter |
| BYM | Diodenmodul |
| 100 | max. Kollektor-Dauergleichstrom (A) |
| GA | Einzelschalter mit IGBT und Freilaufdiode |

BSM 100 GB 120 DL x

| | |
|---|---|
| GB | Halbbrücke (zwei IGBTs und Freilaufdioden) |
| GD | Vollbrücke |
| GT | 3 Einzelschalter mit IGBT und Freilaufdiode |
| GP | Integriertes Modul B6/Break/WR |
| GAL | Choppermodul (Diode kollektorseitig) |
| GAR | Choppermodul (Diode emitterseitig) |
| A | Einzeldiode |
| 120 | Kollektor-Emitter-Sperrspannung in $10^1$ V |
| DL | Typ mit niedriger $v_{CEsat}$ |
| DN2 | schnell schaltender Typ |
| DLC | low lost Typ mit EmCon Diode |
| S | mit Hilfskollektor |
| G | Design Variation |
| Exxx | Sondertyp |

## Brückengleichrichter und Drehstromsteller

TD B6 H K 135 N 16 L OF

| | |
|---|---|
| DD | Dioden-Modul |
| TT | Thyristor-Modul |
| TD | Thyristor/Dioden-Modul |
| B6 | Sechspuls-Brücke |
| W3 | Dreiphasen-Wechselweg |
| C | vollgesteuert |
| H | halbgesteuert |
| U | ungesteuert |
| K | gemeins. Kathode der Thyristoren |
| 135 | Ausgangsstrom (A) (W3C: Effektivstrom) |
| N | Netzthyristor/Diode |
| 16 | periodische Spitzensperrspannung in 100 V |
| L | IsoPACK |
| R | EconoBRIDGE ohne integr. Bremschopper IGBT |
| RR | EconoBRIDGE mit integr. Bremschopper IGBT |
| O | keine garantierte Freiwerdezeit |
| F | kritische Spannungssteilheit |



радиодетали электронные компоненты со склада и под заказ

г.Минск тел.8(017)2005646 www.fotorele.net модули EUPEC IGBT Infineon minsk17@tut.by



# Package Units
# Bipolar Products

| Standard Thyristors and Diodes | Housing Diameter | Packing Unit |
|---|---|---|
| Standard Epoxy Discs | Diode Housing 100mm | 3 |
| | Diode Housing 110mm | 2 |
| | Diode Housing 41mm | 16 |
| | Diode Housing 50mm | 10 |
| | Diode Housing 57mm | 3 |
| | Diode Housing 60mm | 6 |
| | Diode Housing 72mm | 6 |
| | Diode Housing 75mm | 2 |
| | Thyristor Housing 50mm | 10 |
| | Thyristor Housing 57mm | 3 |
| | Thyristor Housing 75mm | 2 |
| | Thyristor Housing100mm | 3 |
| | Thyristor Housing110mm | 2 |
| Standard Ceramic Discs | Diode Housing 41mm | 16 |
| | Diode Housing 56mm | 3 |
| | Diode Housing 58mm | 3 |
| | Diode Housing 74mm | 2 |
| | Thyristor Housing 120mm | 2 |
| | Thyristor Housing 56mm | 3 |
| | Thyristor Housing 74mm | 2 |
| Flatbase / Metric Types | Flatbase 36mm | 10 |
| | Flatbase 54mm | 5 |
| | Metric Wrench Size 27mm | 10 |
| | Metric Wrench Size 32mm | 10 |
| | Metric Wrench Size 42mm | 5 |

| | Housing Diameter | Packing Unit |
|---|---|---|
| PowerBLOCK | PB20 20mm | 10 |
| | PB25 25mm | 8 |
| | PB30 30mm | 4 |
| | PB34 34mm | 5 |
| | PB50 50mm | 6 |
| | PB60 60mm | 4 |
| | PB70 70mm | 2 |

| High Power Thyristors and Diodes | Housing Diameter | Packing Unit |
|---|---|---|
| Ceramic ETT Discs | Thyristor Housing 57mm | 3 |
| | Thyristor Housing 75mm | 2 |
| | Thyristor Housing 110mm | 2 |
| | Thyristor Housing 120mm | 2 |
| | Thyristor Housing 150mm | 1 |
| | Thyristor Housing 170mm | 1 |
| Ceramic LTT Discs | Thyristor Housing 75mm | 3 |
| | Thyristor Housing 150mm | 1 |
| | Thyristor Housing 170mm | 1 |
| Ceramic Diodes | Diode Housing 58mm | 3 |
| | Diode Housing 74mm | 2 |
| | Diode Housing 100mm | 3 |
| | Diode Housing 120mm | 2 |
| | Diode Housing 150mm | 1 |

| Rectifier Modules | Housing Width | Packing Unit |
|---|---|---|
| IsoPACK™ Bridge | 42mm | 4 |
| | 54mm | 3 |
| EconoBRIDGE™ Rectifier | 45mm | 10 |
| EasyBRIDGE | 25,4mm | 40 |
| | 25,4mm | 20 |

радиодетали электронные компоненты со склада и под заказ

г.Минск тел.8(017)2005646 www.fotorele.net модули EUPEC IGBT Infineon minsk17@tut.by

# Package Units
# IGBT Low Power Modules

| EasyPIM™ Modules | Housing Size (overall) | Packing Unit |
|---|---|---|
| EasyPIM™ 750 | 25,4 mm x 35,6 mm | 40 |
| EasyPIM™ 1 | 33 mm x 45,6 mm | 20 |
| EasyPIM™ 1B | 33 mm x 45,6 mm | 24 |
| EasyPIM™ 2 | 45,6 mm x 55,9 mm | 20 |

| EasyPACK Modules | Housing Size (overall) | Packing Unit |
|---|---|---|
| EasyPACK™ 750 | 25,4 mm x 35,6 mm | 40 |
| EasyPACK™ 1 | 33 mm x 45,6 mm | 20 |
| EasyPACK™ 1B | 33 mm x 45,6 mm | 24 |
| EasyPACK™ 2 | 45,6 mm x 55,9 mm | 20 |

# IGBT Medium Power Modules

| EconoPIM™ Modules | Housing Size (overall) | Packing Unit |
|---|---|---|
| EconoPIM™ 1 | 41 mm x 80 mm | 16 |
| EconoPIM™ 2 | 45 mm x 107 mm | 16 |
| EconoPIM™ 3 | 62 mm x 122 mm | 16 |

| EconoPACK™ Modules | Housing Size (overall) | Packing Unit |
|---|---|---|
| EconoPACK™ 1 | 41 mm x 80 mm | 16 |
| EconoPACK™ 2 | 45 mm x 107 mm | 16 |
| EconoPACK™ 3 | 62 mm x 122 mm | 16 |

| 34 mm Modules<br>62 mm Modules | Housing Size (overall) | Packing Unit |
|---|---|---|
| Standard 34mm | 34 mm x 94 mm | 10 |
| Standard 62mm | 62 mm x 106,4 mm | 10 |

| EconoPACK™ +<br>EconoDUAL™ | Housing Size (overall) | Packing Unit |
|---|---|---|
| EconoPACK™ + | 162 mm x 150 mm | 10 |
| EconoDUAL™ | 152 mm x 62 mm | 4 |

# IGBT High Power Modules

| IHM Modules | Housing Size (overall) | Packing Unit |
|---|---|---|
| IHM 73 | 73 mm x 140 mm | 4 |
| IHM 130 | 130 mm x 140 mm | 2 |
| IHM B 130 | 130 mm x 140 mm | 2 |
| IHM190 | 190 mm x 140 mm | 1 |
| IHM B 190 | 190 mm x 140 mm | 1 |

| IHV Modules | Housing Size (overall) | Packing Unit |
|---|---|---|
| IHV 130 | 130 mm x 140 mm | 2 |
| IHV 190 | 190 mm x 140 mm | 1 |



радиодетали электронные компоненты со склада и под заказ