San Ace

AC COOLING FAN

AC San Ace

2013

SANYO DENKI

San Ace COOLING SYSTEMS

AC Fan

Cooling fan operating at 100V to 230V AC
60mm sq. to ϕ172mm

C O N T E N T S

Domain Diagram

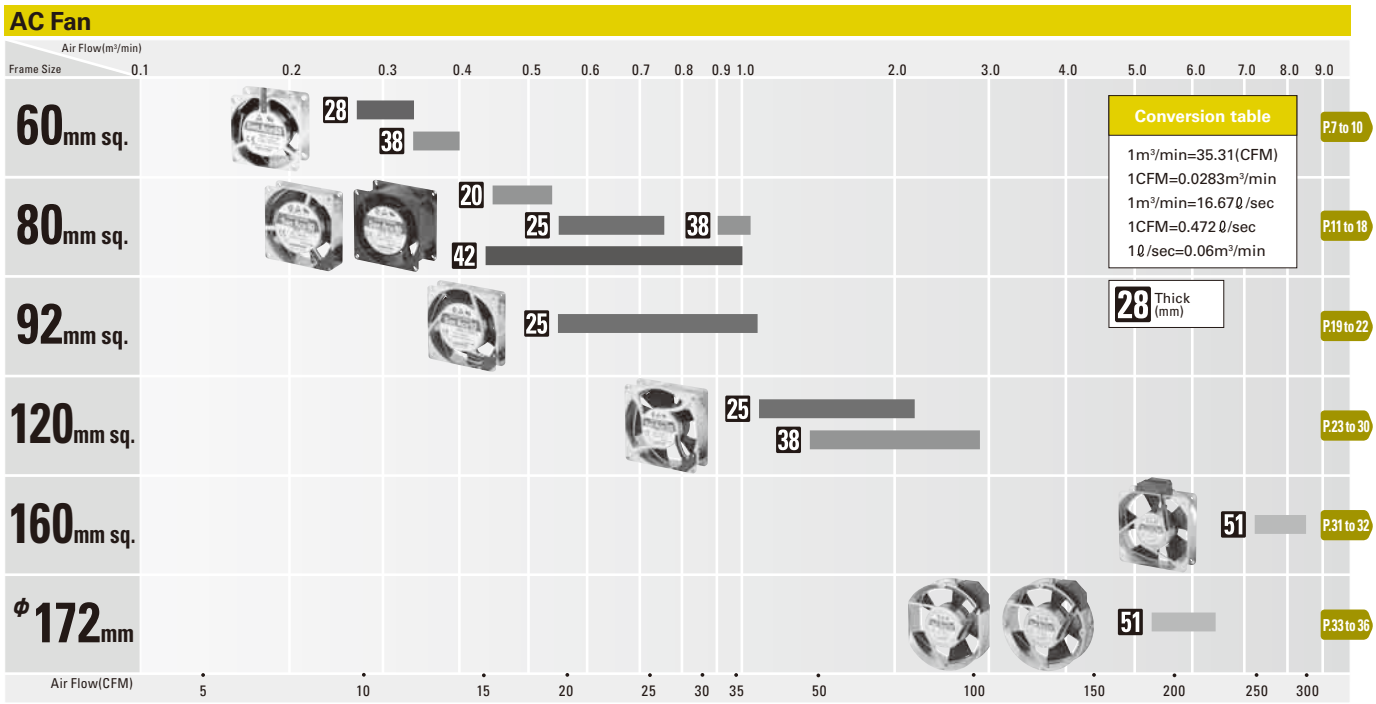

Safety standard list

■AC Fan

✓…UL・CSA・TÜV and CE acquired

Model	Frame size	Thickness	Model No.	Voltage(V)	UL	CSA	TÜV	CE	PSE	Note	PAGE
San Ace 60	60mm sq.	28mm	109-180	100	✓		✓	✓			7
			109-183	115	✓		✓	✓			
		38mm	109-130	100	✓		✓	✓			9
			109-133	115	✓		✓	✓			
San Ace 80	80mm sq.	20mm	109-210	100	✓	✓	✓	✓			11
			109-213	115	✓	✓	✓	✓			
		25mm	109S050	100	✓	✓	✓	✓	✓		13
			109S053	115	✓	✓	✓	✓	✓		
			109S051	200	✓	✓	✓	✓	✓		
			109S054	230	✓	✓	✓	✓	✓		
			109S030	100	✓	✓	✓	✓	✓		
			109S033	115	✓	✓	✓	✓	✓		
			109S031	200	✓	✓	✓	✓	✓		
			109S034	230	✓	✓	✓	✓	✓		
		38mm	109-150	100	✓	✓	✓	✓	✓		15
			109-153	115	✓	✓	✓	✓	✓		
			109-151	200	✓	✓	✓	✓	✓		
			109-154	230	✓	✓	✓	✓	✓		
		42mm	109-040UL	100	✓	✓	✓	✓	✓		17
			109-043UL	115	✓	✓	✓	✓	✓		
			109-041UL	200	✓	✓	✓	✓	✓		
			109-044UL	230	✓	✓	✓	✓	✓		
			109-047UL	100	✓	✓	✓	✓	✓	Low-speed	
			109-033UL	115	✓	✓	✓	✓	✓	〃	
San Ace 92	92mm sq.	25mm	109S091	100	✓	✓	✓	✓	✓		19
			109S093	115	✓	✓	✓	✓	✓		
			109S092	200	✓	✓	✓	✓	✓		
			109S094	230	✓	✓	✓	✓	✓		
			109S095	100	✓	✓	✓	✓	✓		
			109S096	100	✓	✓	✓	✓	✓	Low-speed	
			109S193	115	✓	✓	✓	✓	✓	〃	
			109S192	200	✓	✓	✓	✓	✓	〃	
			109S194	230	✓	✓	✓	✓	✓	〃	

Model	Frame size	Thickness	Model No.	Voltage(V)	UL	CSA	TÜV	CE	PSE	Note	PAGE
San Ace 92	92mm sq.	25mm (with sensor)	109S491	100	✓		✓	✓	✓		19
			109S493	115	✓		✓	✓	✓		
			109S492	200	✓		✓	✓	✓		
			109S494	230	✓		✓	✓	✓		
			109S495	100	✓		✓	✓	✓		
			109S496	100	✓		✓	✓	✓	Low-speed	
San Ace 120	120mm sq.	25mm	109S085	100	✓	✓	✓	✓	✓		23
			109S084	115	✓	✓	✓	✓	✓		
			109S088	200	✓	✓	✓	✓	✓		
			109S087	230	✓	✓	✓	✓	✓		
			109S081	100	✓	✓	✓	✓	✓		
			109S083	115	✓	✓	✓	✓	✓		
			109S082	200	✓	✓	✓	✓	✓		
			109S089	230	✓	✓	✓	✓	✓		
			109S086	100	✓	✓	✓	✓	✓	Low-speed	
		25mm (with sensor)	109S485	100	✓		✓	✓	✓		
			109S484	115	✓		✓	✓	✓		
			109S488	200	✓		✓	✓	✓		
			109S487	230	✓		✓	✓	✓		
			109S486	100	✓		✓	✓	✓	Low-speed	
		38mm	109S075UL	100	✓	✓	✓	✓	✓		27
			109S074UL	115	✓	✓	✓	✓	✓		
			109S078UL	200	✓	✓	✓	✓	✓		
			109S072UL	230	✓	✓	✓	✓	✓		
		38mm	109S005	100					✓		
			109S005UL	100	✓	✓	✓	✓	✓		
			109S024	120					✓		
			109S024UL	115	✓	✓	✓	✓	✓		
			109S008	200					✓		
			109S008UL	200	✓	✓	✓	✓	✓		
			109S025	230					✓		
			109S025UL	230	✓	✓	✓	✓	✓		
		38mm	109S029UL	100	✓	✓	✓	✓	✓		
			109S013	100					✓		
			109S013UL	100	✓	✓	✓	✓	✓		
			109S006	100					✓		
			109S006UL	100/115	✓	✓	✓	✓	✓		
			109S010	200					✓		
			109S010UL	200/240	✓	✓	✓	✓	✓		
		38mm (with sensor)	109S405UL	100	✓		✓	✓	✓		
			109S424UL	115	✓		✓	✓	✓		
			109S408UL	200	✓		✓	✓	✓		
			109S425UL	230	✓		✓	✓	✓		
			109S429UL	100	✓		✓	✓	✓		
			109S406UL	100	✓		✓	✓	✓	Low-speed	
		38mm (with sensor)	109S475UL	100	✓		✓	✓	✓		
			109S474UL	115	✓		✓	✓	✓		
			109S478UL	200	✓		✓	✓	✓		
			109S472UL	230	✓		✓	✓	✓		
San Ace 160	160mm sq.	51mm	109-601	100	✓	✓	✓	✓	✓		31
			109-604	115	✓	✓	✓	✓	✓		
			109-602	200	✓	✓	✓	✓	✓		
			109-603	230	✓	✓	✓	✓	✓		
		51mm (with sensor)	109-641	100	✓		✓	✓	✓		
			109-644	115	✓		✓	✓	✓		
			109-642	200	✓		✓	✓	✓		
			109-643	230	✓		✓	✓	✓		
San Ace 172	φ172mm	51mm (Sidecut type)	109S301	100	✓	✓	✓	✓	✓		33
			109S304	115	✓	✓	✓	✓	✓		
			109S302	200	✓	✓	✓	✓	✓		
			109S303	230	✓	✓	✓	✓	✓		
		51mm (Round type)	109-311	100	✓	✓	✓	✓	✓		35
			109-314	115	✓	✓	✓	✓	✓		
			109-312	200	✓	✓	✓	✓	✓		
			109-313	230	✓	✓	✓	✓	✓		
		51mm (with sensor)	109-371	100	✓		✓	✓	✓		
			109-374	115	✓		✓	✓	✓		
			109-372	200	✓		✓	✓	✓		
			109-373	230	✓		✓	✓	✓		

Safety standard list

Plug Code

✓…UL·CSA·TÜV and CE acquired

Model.No	UL	CSA	TÜV	CE	Applicable model
489-008-L10					80×80×42mm
489-008-L21					80×80×42mm
489-008-L35					80×80×42mm
489-016-L10					120×120×25mm 92×92×25mm 80×80×25mm 80×80×38mm
489-016-L21					120×120×25mm 92×92×25mm 80×80×25mm 80×80×38mm
489-006-L10					120×120×38mm
489-006-L21					120×120×38mm
489-006-L35					120×120×38mm
489-037-L10					120×120×38mm
489-037-L21					120×120×38mm
489-037-L35					120×120×38mm
489-1618-L10					160×160×51mm
489-1618-L21					160×160×51mm
489-1618-L28					160×160×51mm

Model.No	UL	CSA	TÜV	CE	Applicable model
489-1619-L10					Φ172×51mm Φ172×150×51mm 160×160×51mm
489-1619-L21					Φ172×51mm Φ172×150×51mm 160×160×51mm
489-007-L10	✓	✓			120×120×38mm
489-007-L21	✓	✓			120×120×38mm
489-047-L10	✓	✓			120×120×25mm 92×92×25mm 80×80×25mm 80×80×38mm
489-047-L21	✓	✓			120×120×25mm 92×92×25mm 80×80×25mm 80×80×38mm
489-084-L10	✓	✓			Φ172×51mm Φ172×150×51mm 160×160×51mm L-Shaped
489-084-L21	✓	✓			Φ172×51mm Φ172×150×51mm 160×160×51mm L-Shaped
489-086-L10	✓	✓			160×160×51mm Straight
489-086-L21	✓	✓			160×160×51mm Straight

The meaning of the specifications

Model No.	① Voltage [V]	② Frequency [Hz]	③ Input [W]	④ Current [A]	⑤ Locked Rotor Current [A]	⑥ Rated Speed [min⁻¹]	⑦ Max. Air Flow [m³/min] [CFM]	⑧ Max. Static Pressure [Pa] [inchH₂O]	⑨ SPL [dB(A)]	⑩ Operating Temperature [℃]	⑪ Expected Life [h]
109-180	100	50/60	5/4	0.06/0.05	0.07/0.06	2250/2700	0.27/0.33 9.5/11.7	11.8/18.6 0.047/0.075	24/26	−30 to +70	25,000
109-183	115				0.06/0.05						

①Voltage……This is the necessary voltage to drive the fan.
Single-phase AC100V, AC115V, AC200V and AC230V are also available.
②Frequency ……This is a frequency of alternating current(AC). The frequencies of 50Hz and 60Hz are existing in Japan.
Performance of AC fan varies depending on the frequency.
③Input ……The input value during the fan's rated operation without load.
④Current……The current value during the fan's rated operation without load.
⑤Locked Rotor Current ……This is a current when rotor of motor that applies rated voltage is locked.
⑥Rated Speed ……The rotating speed during the fan's rated operation without load.
⑦Max. Air Flow ……The maximum air volume that the fan can output during rated operation
(according to the company's dual-chamber device).
The volume of air generated by the fan in a given time period.
⑧Max. Static Pressure……The maximum static pressure value that the fan can output during rated operation
(according to the company's dual-chamber device).
The static pressure is the fan's force to propel air by overcoming the resistance of the device that uses the fan when it propels air.
⑨SPL……"SPL" is Sound Pressure Level. The noise level during the fan's rated operation.
Please refer to Page 46 for the method used to measure the noise.
⑩Operating Temperature Range…The temperature range over which fan operation is guaranteed (Non- condensing)
⑪Expected Life ……The fan's expected operating life when the fan operates continuously at the rated voltage at a temperature of 60˚C and at relative humidity of 90%.
For details, please refer to Page 46.

Safety standards

Description of safety standards

1. UL ratings (USA)

Underwriters Laboratories Inc. was established by the American Union of Fire Insurance Underwriters. The purpose of UL is to ensure safety of machines, equipment, and materials and protect human lives and property from fire and other accidents. To that end, UL has conducted numerous tests and extensive research and, as a result, set up UL ratings. Any seller of products in any of the majority of the states of the USA must produce their products according to the UL ratings, have them pass UL-specified safety inspections, and have them listed in UL's registration book. Therefore, to export and sell any product in the United States, one must in most cases apply for UL-listing.
Additionally, UL is accredited by The Standards Council of Canada (SCC) as both a Certification Organization (CO) and a Testing Organization (TO) and is officially recognized in all provinces and territories throughout Canada. Accordingly, our products can be tested by UL for compliance with Canadian safety standards. Certified products are entitled to display the C-UL Mark, which authorizes their use and sale in Canada. If products are deemed to be compliant with both U.S. and Canadian standards, then both the UL Mark and C-UL Mark can be displayed or a combination U.S. and Canadian mark (bottom left).
Our products are certified as satisfying all UL507 requirements.

2. CSA standards
(Canada)

The Canadian Standards Association (CSA) was set up in response to the advice of the Canadian government. In Canada, the law prohibits the use and sale of any product other than those approved under CSA in terms of safety. CSA has set up CSA standards as inspection procedures and other requirements to ensure product safety.
Our products are certified as satisfying the CSA standard C22.2 No. 113.

3. EN standards
(EU members)

In the EU territory, the harmonization of industrial standards and safety standards of different countries is under way. The unified standards are called Harmonized Standards. Each of these standards is marked EN above the standard number. EN standards offer the grounds in design and manufacture when one exports a product to the EU territory. In order for a product to receive a safety marking, the product must be found to conform to TÜV, VDE, or other relevant standard.
Our products are certified as satisfying all TÜV Rheinland EN60950 requirements.

4. Electrical Appliance and Material Safety Law

As of April 1, 2001, the Electrical Appliance and Material Control Law has been revised and reenacted as the Electrical Appliance and Material Safety Law.
AC fans are classified as 'Blowers' under 'Electric motor-operated appliances' . They are categorized as electrical products other than specific electrical appliances (with the exception of some models) and are required to be labeled to indicate PSE certification.

5. CE marking

CE marking

To distribute their equipment in the EU territory, manufacturers are obligated to give a CE marking as proof that the equipment conforms to related EU directives. Manufacturers use EN standards as criteria of judgment as to whether the equipment satisfies the requirements of specific directives or, in the absence of applicable EN standards, they use IEC standards. Manufacturers then prepare a self-declaration to indicate that the equipment conforms to related directives and apply a CE marking. (Depending on the degree of risk of the equipment, some kinds of equipment are required to receive type tests conducted by certified authorities and, after a type test certificate is obtained, manu-facturers make a self-declaration.)
Scope of application and compulsory timing of major EC directives
Machine directives (89/392/EEC, 91/368/EEC, and 93/44/EEC)
These directives apply to equipment that has a moving part that may injure humans. The directives generally apply to a wide range of machine tools and other industrial machines (became compulsory on January 1, 1995).
EMC directives (89/326/EEC and 92/31/EEC)
They apply to equipment which may be affected by electromagnetic interference (EMI) or has ele-ctromagnetic susceptibility (EMS) (became co-mpulsory on January 1, 1996).
Low-voltage directive (73/23/EEC)
This directive applies to equipment that is used in an AC range between 50 and 1,000V and in a DC range between 75 and 1,500V (became compulsory on January 1, 1997).

JIS: Japanese Industrial Standards
Japan's national standards related to mining and manufacturing industries

IEC : International Electrotechnical Commission
This is an international commission on electrical standardization. This commission promotes the unification and cooperation of international standards related to electric and electronics engineering and issues IEC standards in order eventually to allow different countries to conform to the international standards.

DIN : Deutsches Indstitut fur Normung e.V.
This is a German standards institute. The institute uses a wide-range set of standards covering many industrial sectors. The set of standards includes basic standards.

VDE : Verband Deutscher Elektrotechniker e.V.
It is a German association of electric engineers. VDE establishes safety standards related to electrical engineering and issues them as DIN-VDE standards.

RoHS directive

Since October 2012, all the products in this catalog have complied with the maximum concentration values of the hazardous substances referred to in the Annex II to EU RoHS Directive 2011/65/EU,* except for the exempted applications specified in the Annex III to the Directive.
Please note that SANYO DENKI does not use exemption 7(c)-III: Lead in dielectric ceramic in capacitors for a rated voltage of less than 125 V AC or 250 V DC, for those products.
* Lead, mercury, cadmium, hexavalent chromium, polybrominated biphenyls (PBB) and polybrominated diphenyl ethers (PBDE)

RoHS Directive:
DIRECTIVE 2011/65/EU OF THE EUROPEAN PARLIAMENT AND OF THE COUNCIL of 8 June 2011 on the restriction of the use of certain hazardous substances in electrical and electronic equipment

60 mm sq.

San Ace 60

28mm thick, 38mm thick

General Specifications

- Material ····· Frame: Aluminum, Impeller:Plastics (Flammability: UL94V-1)
- Expected Life ····· Varies for each model (L10: Survival rate: 90% at 60℃, rated voltage, and continuously run in a free air state)
- Dielectric Strength ····· 50/60Hz 1,500VAC 1minute (between lead conductor and frame)
- Lead Wire ····· black, 2pcs
- Storage Temperature ··· −30℃ to +70℃ (Non-condensing)

60×60×28mm 〔Mass：130g〕

Specifications

Model No.	Voltage [V]	Frequency [Hz]	Input [W]	Current [A]	Locked Rotor Current [A]	Rated Speed [min⁻¹]	Max. Air Flow [m³/min]	Max. Air Flow [CFM]	Max. Static Pressure [Pa]	Max. Static Pressure [inchH₂O]	SPL [dB(A)]	Operating Temperature [℃]	Expected Life [h]
109-180	100	50/60	5/4	0.06/0.05	0.07/0.06	2,250/2,700	0.27/0.33	9.5/11.7	11.8/18.6	0.047/0.075	24/26	−30 to +70	25,000
109-183	115				0.06/0.05								

Dimensions (Unit : mm)

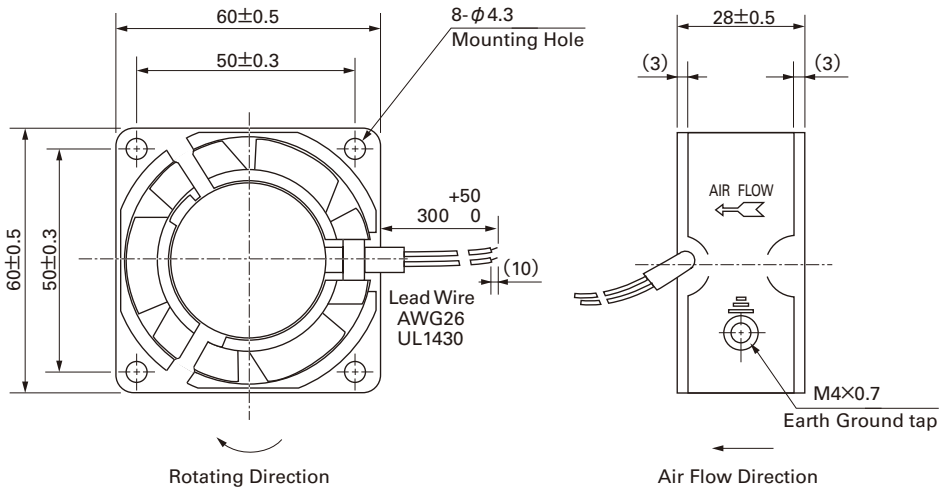

Reference dimension of mounting holes and vent opening (Unit : mm)

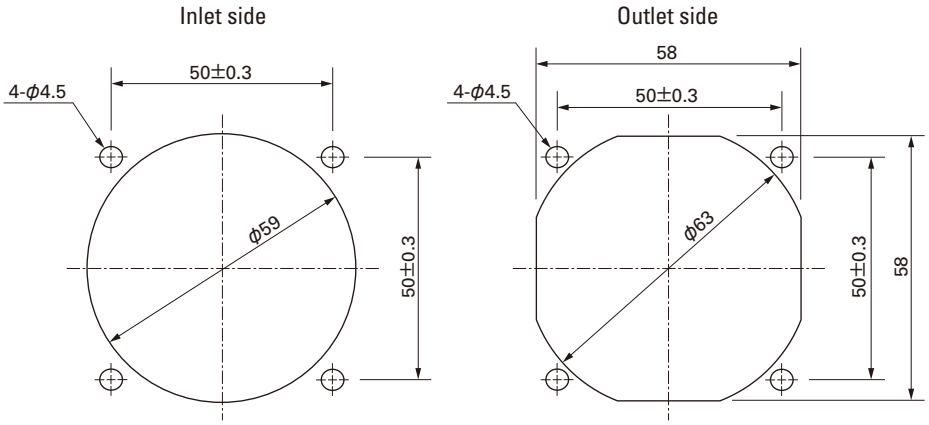

Wiring diagram

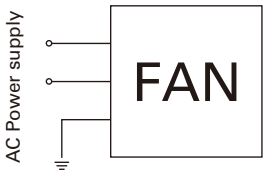

Options (Unit : mm)

Finger guards

Model : 109-139E Surface treatment : Nickel-chrome plating (silver)
: 109-139H : Cation electropainting (black)

Color

Inlet side, Outlet side

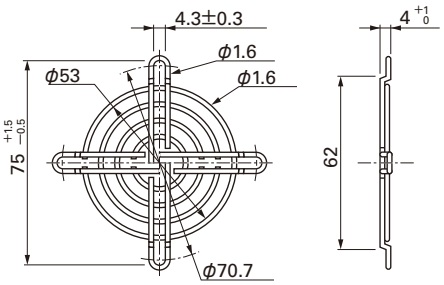

Resin finger guards

Model : 109-1003G

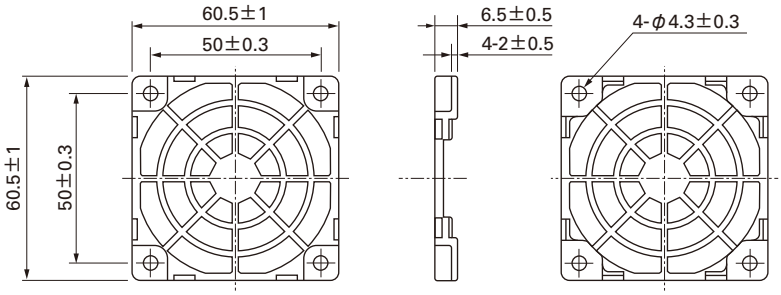

Resin filter kits

Model : 109-1003F13 (13PPI), 109-1003F20 (20PPI)
: 109-1003F30 (30PPI), 109-1003F40 (40PPI)

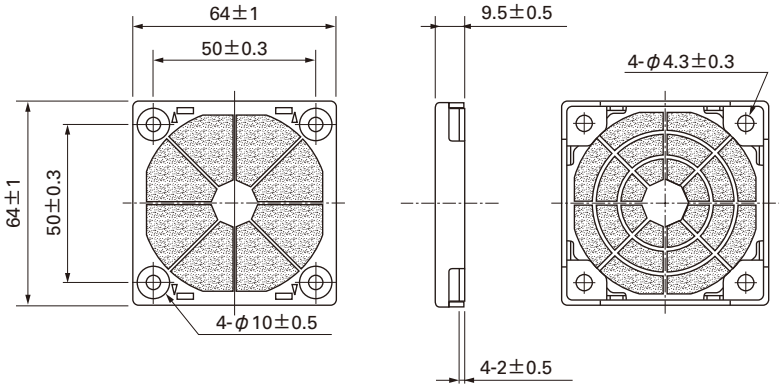

Air Flow - Static Pressure Characteristics

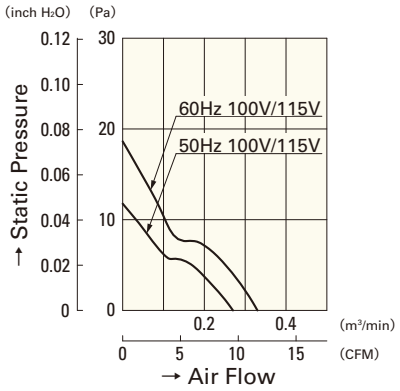

109-180
109-183

60 mm sq.

San Ace 60

28mm thick, **38mm thick**

General Specifications

- Material ····· Frame: Aluminum, Impeller:Plastics (Flammability: UL94V-1)
- Expected Life ····· Varies for each model (L10: Survival rate: 90% at 60℃, rated voltage, and continuously run in a free air state)
- Dielectric Strength ····· 50/60Hz 1,500VAC 1minute (between lead conductor and frame)
- Lead Wire ····· black, 2pcs
- Storage Temperature ··· −30℃ to +70℃ (Non-condensing)

60×60×38mm 〔Mass：170g〕

Specifications

Model No.	Voltage [V]	Frequency [Hz]	Input [W]	Current [A]	Locked Rotor Current [A]	Rated Speed [min⁻¹]	Max. Air Flow [m³/min]	Max. Air Flow [CFM]	Max. Static Pressure [Pa]	Max. Static Pressure [inchH₂O]	SPL [dB(A)]	Operating Temperature [℃]	Expected Life [h]
109-130	100	50/60	6/5	0.08/0.07	0.08/0.07	2,600/3,150	0.33/0.4	11.7/14.1	16.3/23.3	0.065/0.094	28/30	−30 to +60	25,000
109-133	115			0.07/0.06	0.07/0.06								

Dimensions (Unit : mm)

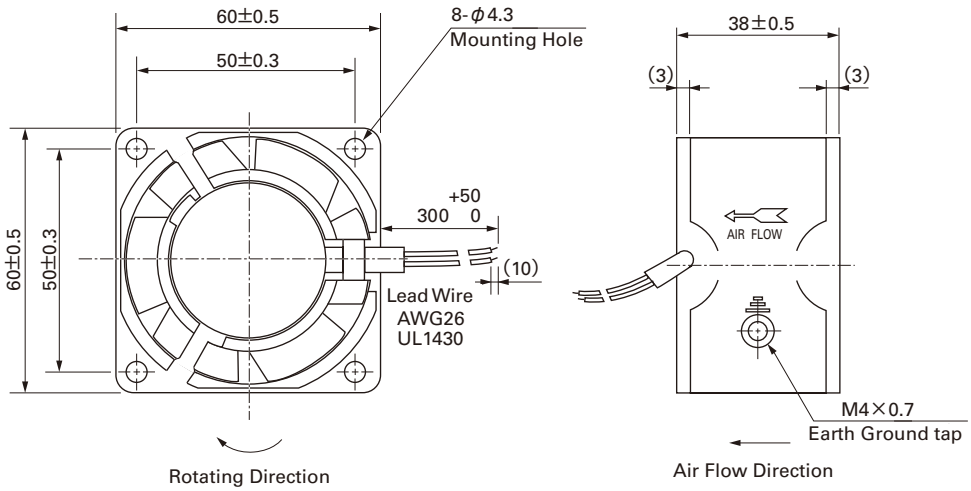

Reference dimension of mounting holes and vent opening (Unit : mm)

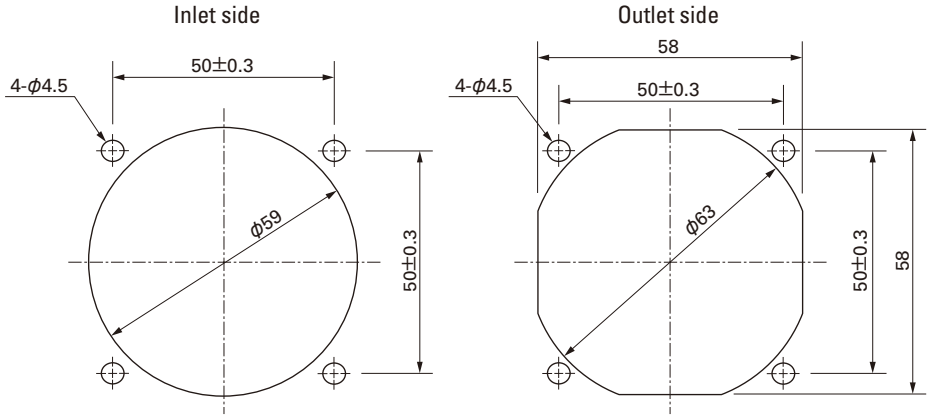

Wiring diagram

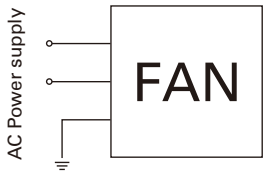

Options (Unit : mm)

Finger guards

Model : 109-139E Surface treatment : Nickel-chrome plating (silver)
: 109-139H : Cation electropainting (black)

Color

Inlet side, Outlet side

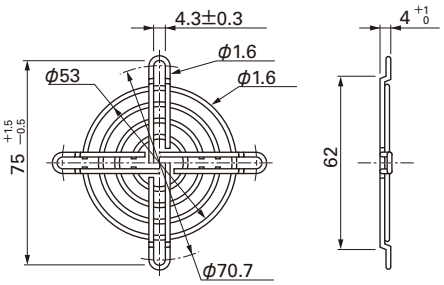

Resin finger guards

Model : 109-1003G

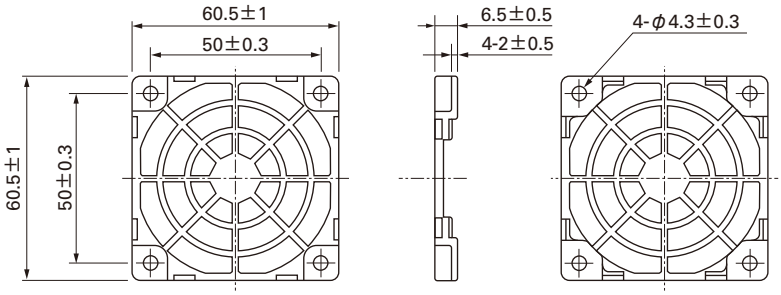

Resin filter kits

Model : 109-1003F13 (13PPI), 109-1003F20 (20PPI)
: 109-1003F30 (30PPI), 109-1003F40 (40PPI)

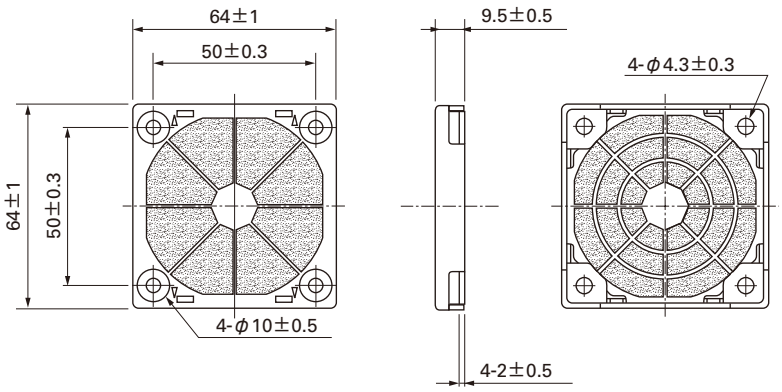

Air Flow - Static Pressure Characteristics

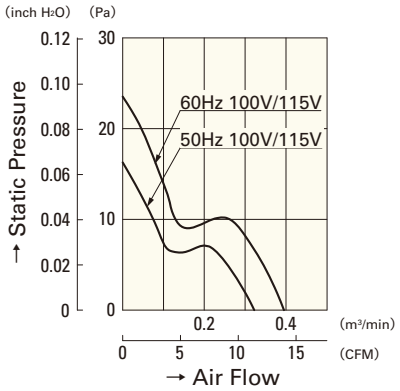

109-130
109-133

80 mm sq.

San Ace 80

20mm thick

25mm thick, 38mm thick, 42mm thick

General Specifications

- Material ····· Frame: Aluminum, Impeller:Plastics (Flammability: UL94V-1)
- Expected Life ····· Varies for each model (L10:Survival rate: 90% at 60℃, rated voltage,and continuously run in a free air state)
- Dielectric Strength ····· 50/60Hz 1,500VAC 1minute (between input terminal and frame or between lead conductor and frame)
- Lead Wire ····· black, 2pcs
- Storage Temperature ··· −30℃ to +70℃ (Non-condensing)

80×80×20mm 〔Mass：180g〕

Specifications

Model No.	Voltage [V]	Frequency [Hz]	Input [W]	Current [A]	Locked Rotor Current [A]	Rated Speed [min⁻¹]	Max. Air Flow [m³/min]	Max. Air Flow [CFM]	Max. Static Pressure [Pa]	Max. Static Pressure [inchH₂O]	SPL [dB(A)]	Operating Temperature [℃]	Expected Life [h]
109-210	100	50/60	6/5	0.07/0.06	0.07/0.06	2,500/3,000	0.44/0.53	15.5/18.7	23.5/31.4	0.094/0.126	26/31	−30 to +60	25,000
109-213	115			0.06/0.05	0.06/0.05								

Dimensions (Unit : mm)

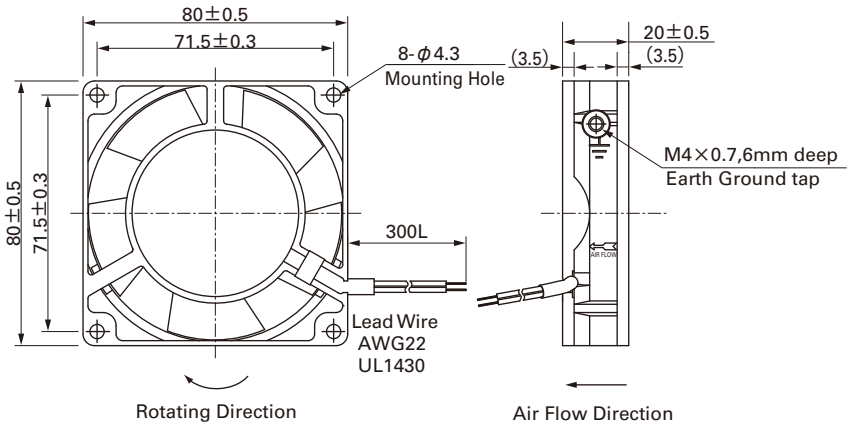

Reference dimension of mounting holes and vent opening (Unit : mm)

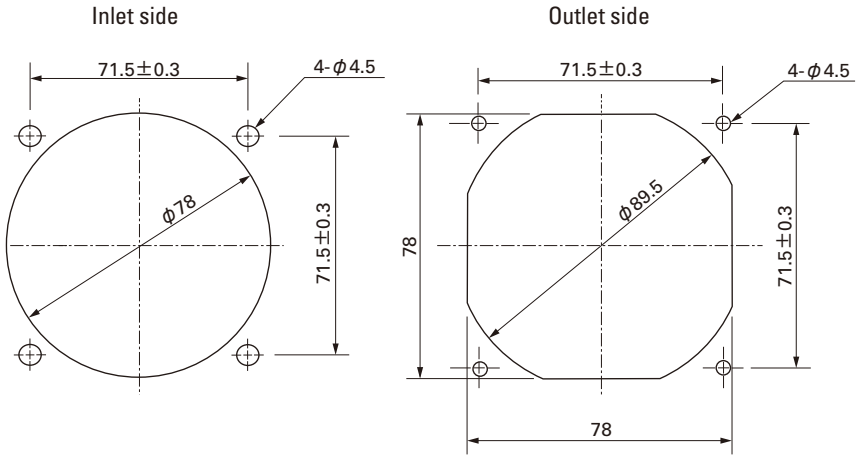

Wiring diagram

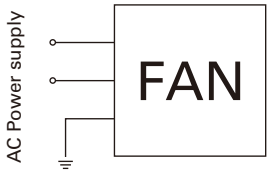

Options (Unit : mm)

Finger guards

Model : 109-049C Surface treatment : Nickel-chrome plating (silver) Color

Outlet side

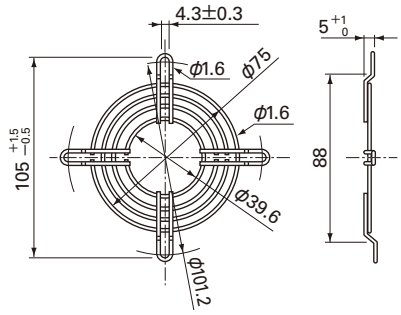

Model : 109-049E Surface treatment : Nickel-chrome plating (silver) Color
: 109-049H : Cation electropainting (black)

Inlet side, Outlet side

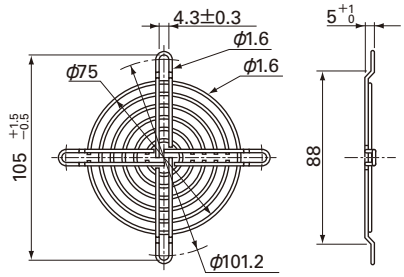

Resin finger guards

Model : 109-1002G

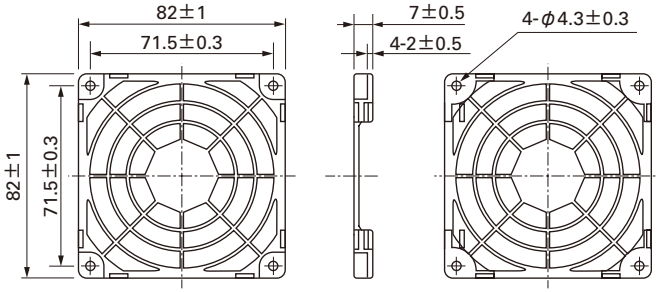

Resin filter kits

Model : 109-1002F13 (13PPI), 109-1002F20 (20PPI)
: 109-1002F30 (30PPI), 109-1002F40 (40PPI)

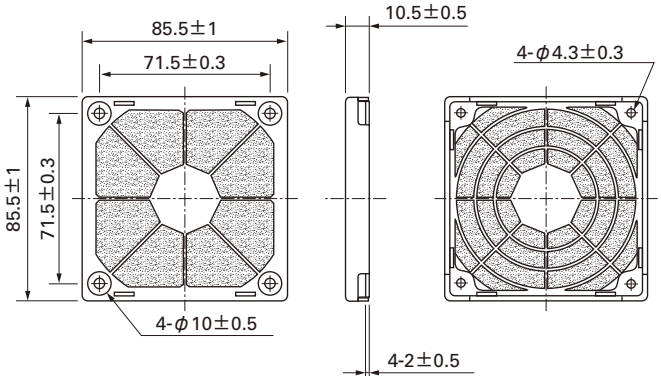

Air Flow - Static Pressure Characteristics

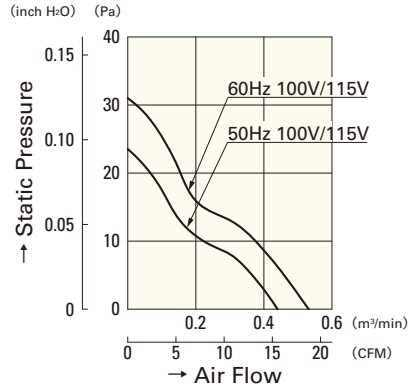

109-210
109-213

80 mm sq.

San Ace 80

20mm thick
25mm thick, 38mm thick, 42mm thick

General Specifications

- Material ····· Frame: Aluminum, Impeller:Plastics (Flammability: UL94V-1)
- Expected Life ····· Varies for each model (L10:Survival rate: 90% at 60℃, rated voltage,and continuously run in a free air state)
- Dielectric Strength ····· 50/60Hz 1,500VAC 1minute (between input terminal and frame or between lead conductor and frame)
- Storage Temperature ··· −30℃ to +70℃ (Non-condensing)

80×80×25mm 〔Mass：270g〕

Specifications

Model No.	Voltage [V]	Frequency [Hz]	Input [W]	Current [A]	Locked Rotor Current [A]	Rated Speed [min⁻¹]	Max. Air Flow [m³/min]	[CFM]	Max. Static Pressure [Pa]	[inchH₂O]	SPL [dB(A)]	Operating Temperature [℃]	Expected Life [h]
109S050	100	50/60	9/7	0.12/0.1	0.13/0.11	2,650/3,100	0.63/0.76	22.3/26.9	27.5/38.3	0.110/0.154	30/33	−30 to +60	25,000
109S053	115			0.1 /0.08	0.11/0.09								
109S051	200			0.06/0.05	0.06/0.05								
109S054	230			0.05/0.04	0.05/0.04								
109S030	100			0.12/0.1	0.13/0.11	2,350/2,700	0.55/0.63	19.4/22.3	21.6/28.4	0.087/0.114	28/30		
109S033	115			0.1 /0.08	0.11/0.09								
109S031	200			0.06/0.05	0.06/0.05								
109S034	230			0.05/0.04	0.05/0.04								

Dimensions (Unit : mm)

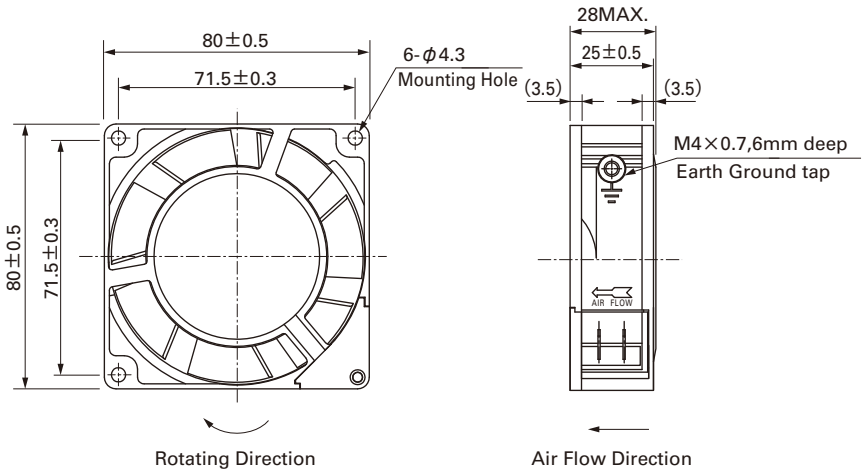

Reference dimension of mounting holes and vent opening (Unit : mm)

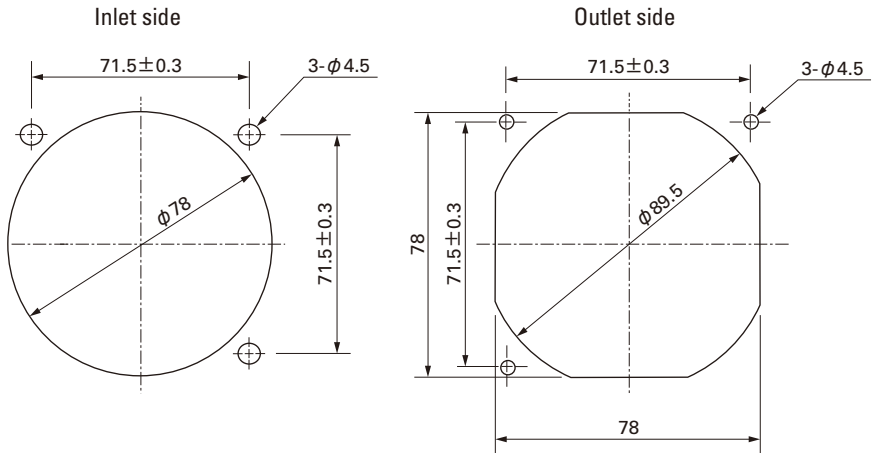

Wiring diagram

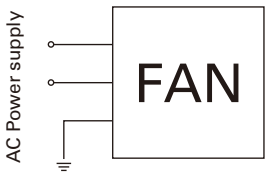

Options (Unit : mm)

Finger guards

Model : 109-049C Surface treatment : Nickel-chrome plating (silver) Color

Outlet side

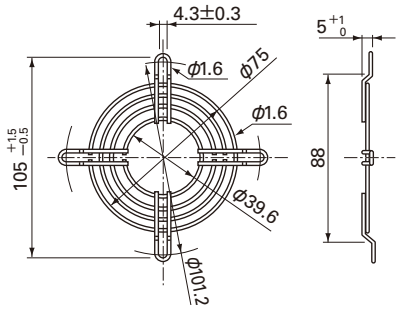

Model : 109-049E Surface treatment : Nickel-chrome plating (silver) Color
: 109-049H : Cation electropainting (black)

Inlet side, Outlet side

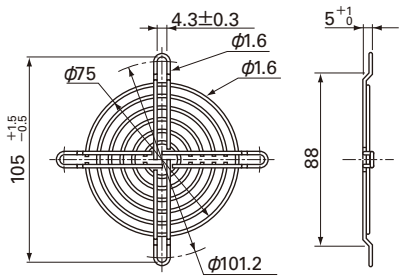

Resin finger guards

Model : 109-1002G

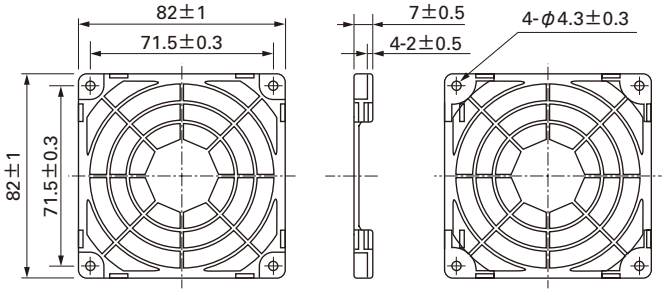

Resin filter kits

Model : 109-1002F13 (13PPI), 109-1002F20 (20PPI)
: 109-1002F30 (30PPI), 109-1002F40 (40PPI)

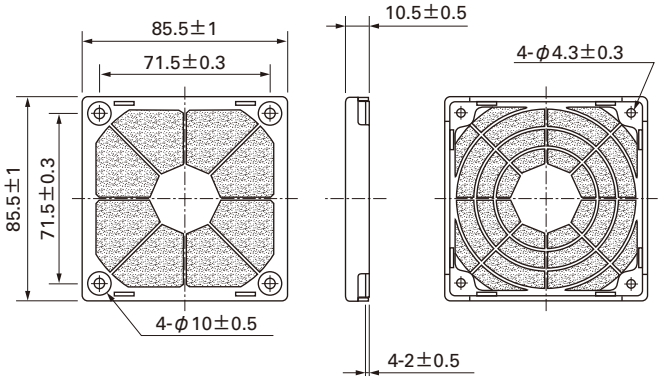

Plug cord

(Products compliant with Electrical Appliance and Material Safety Law)
Model : 489-016-L10/489-016-L21

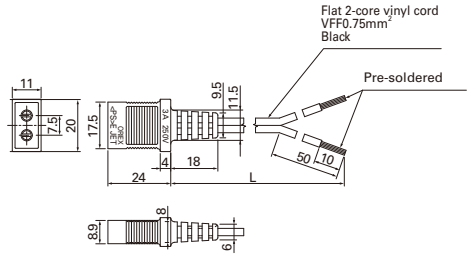

(UL/CSA CERTIFIED)
UL FILE No.E50197 CSA FILE No.LR67048
Model : 489-047-L10/489-047-L21

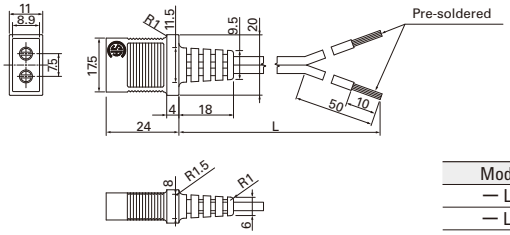

Model	Power cord length(mm)
— L10	1,000
— L21	2,100

Air Flow - Static Pressure Characteristics

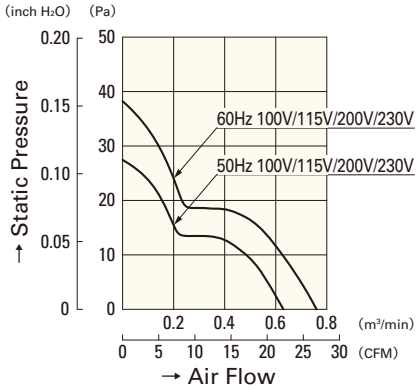

109S050
109S053
109S051
109S054

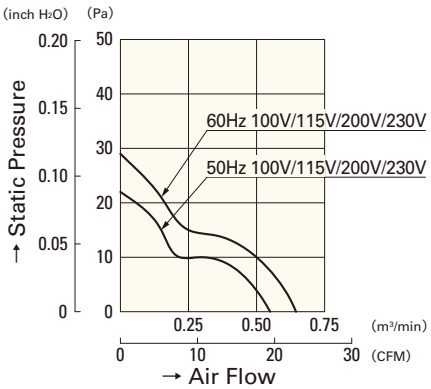

109S030
109S033
109S031
109S034

80 mm sq.

San Ace 80

20mm thick
25mm thick, **38mm thick**, 42mm thick

General Specifications

- Material ····· Frame: Aluminum, Impeller:Plastics (Flammability: UL94V-1)
- Expected Life ····· Varies for each model (L10:Survival rate: 90% at 60℃, rated voltage,and continuously run in a free air state)
- Dielectric Strength ····· 50/60Hz 1,500VAC 1minute (between input terminal and frame or between lead conductor and frame)
- Storage Temperature ··· −30℃ to +70℃ (Non-condensing)

80×80×38mm 〔Mass：400g〕

Specifications

Model No.	Voltage [V]	Frequency [Hz]	Input [W]	Current [A]	Locked Rotor Current [A]	Rated Speed [min⁻¹]	Max. Air Flow [m³/min]	Max. Air Flow [CFM]	Max. Static Pressure [Pa]	Max. Static Pressure [inchH₂O]	SPL [dB(A)]	Operating Temperature [℃]	Expected Life [h]
109-150	100	50/60	9/8	0.13/0.11	0.17/0.15	2,700/3,150	0.9/1.05	31.8/37.1	31.4/44.1	0.126/0.177	35/39	−30 to +60	25,000
109-153	115			0.11/0.1	0.14/0.12								
109-151	200			0.07/0.06	0.09/0.08								
109-154	230			0.06/0.05	0.08/0.07								

Dimensions (Unit : mm)

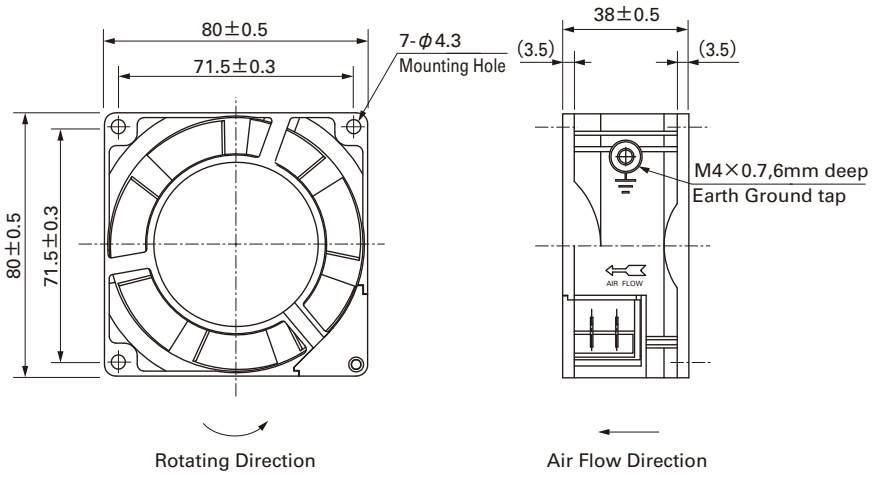

Reference dimension of mounting holes and vent opening (Unit : mm)

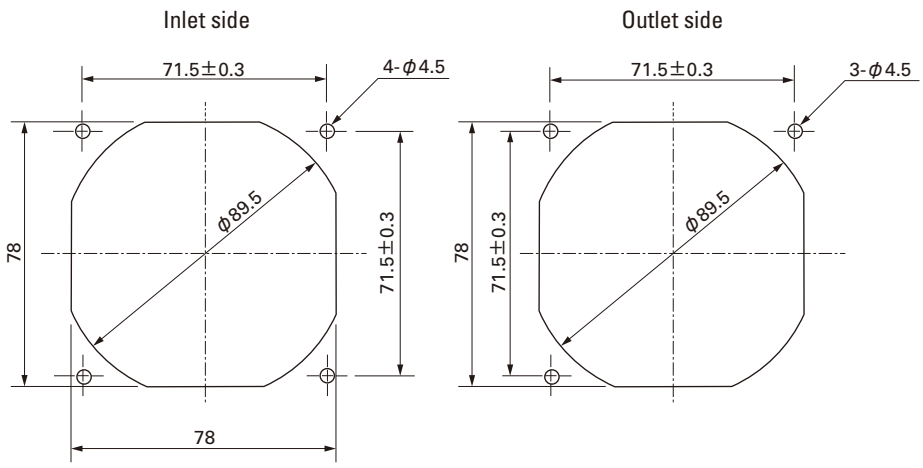

Wiring diagram

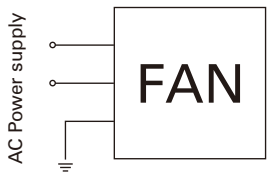

Options (Unit : mm)

Finger guards

Model : 109-049C Surface treatment : Nickel-chrome plating (silver) Color

Outlet side

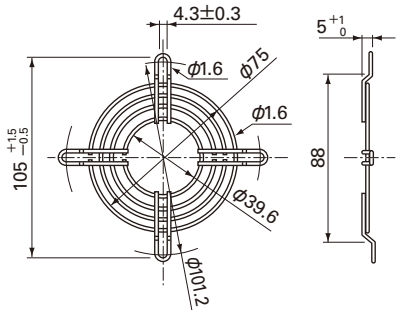

Model : 109-049E Surface treatment : Nickel-chrome plating (silver) Color
: 109-049H : Cation electropainting (black)

Inlet side, Outlet side

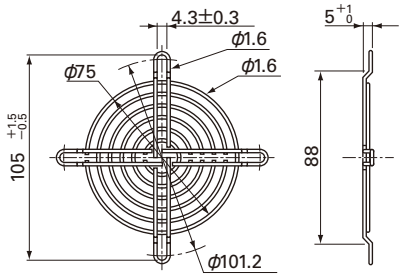

Resin finger guards

Model : 109-1002G

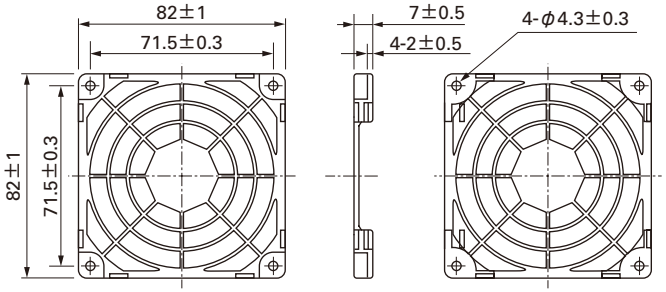

Resin filter kits

Model : 109-1002F13 (13PPI), 109-1002F20 (20PPI)
: 109-1002F30 (30PPI), 109-1002F40 (40PPI)

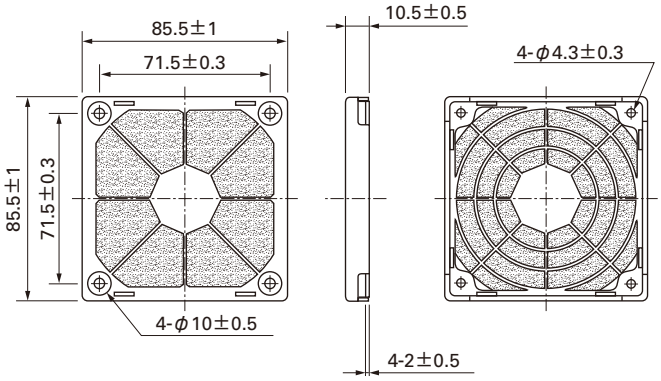

Plug cord

(Products compliant with Electrical Appliance and Material Safety Law)
Model : 489-016-L10/489-016-L21

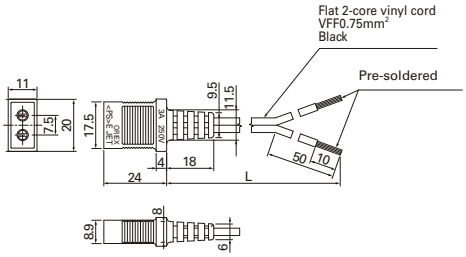

(UL/CSA CERTIFIED)
UL FILE No.E50197 CSA FILE No.LR67048
Model : 489-047-L10/489-047-L21

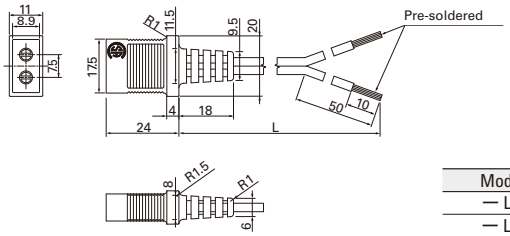

Model	Power cord length(mm)
— L10	1,000
— L21	2,100

Air Flow - Static Pressure Characteristics

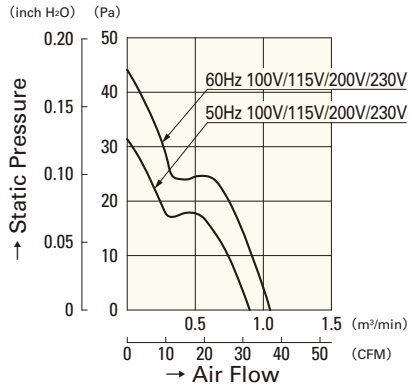

109-150
109-153
109-151
109-154

80 mm sq.

San Ace 80

20mm thick
25mm thick, 38mm thick, **42mm thick**

General Specifications

- Material ····· Frame: Aluminum, Impeller:Plastics (Flammability: UL94V-1)
- Expected Life ····· Varies for each model (L10:Survival rate: 90% at 60℃, rated voltage,and continuously run in a free air state)
- Dielectric Strength ····· 50/60Hz 1,500VAC 1minute (between input terminal and frame)
- Storage Temperature ··· −30℃ to +70℃ (Non-condensing)

80×80×42mm 〔Mass：410g〕

Specifications

※represents low-speed.

Model No.	Voltage [V]	Frequency [Hz]	Input [W]	Current [A]	Locked Rotor Current [A]	Rated Speed [min⁻¹]	Max. Air Flow [m³/min]	Max. Air Flow [CFM]	Max. Static Pressure [Pa]	Max. Static Pressure [inchH₂O]	SPL [dB(A)]	Operating Temperature [℃]	Expected Life [h]
109-040UL	100	50/60	10/9	0.13/0.11	0.16/0.14	2,650/3,100	0.85/1.0	30.0/35.3	24.5/35.3	0.098/0.142	40/44	−30 to +60	25,000
109-043UL	115			0.11/0.1	0.14/0.12								
109-041UL	200			0.07/0.06	0.08/0.07								
109-044UL	230			0.06/0.05	0.07/0.06								
109-047UL ※	100		4/3.5	0.05/0.05	0.05/0.05	1,500/1,500	0.43/0.43	15.2/15.2	8.8/8.8	0.035/0.035	24/24		
109-033UL ※	115			0.04/0.04	0.04/0.04								

Dimensions (Unit : mm)

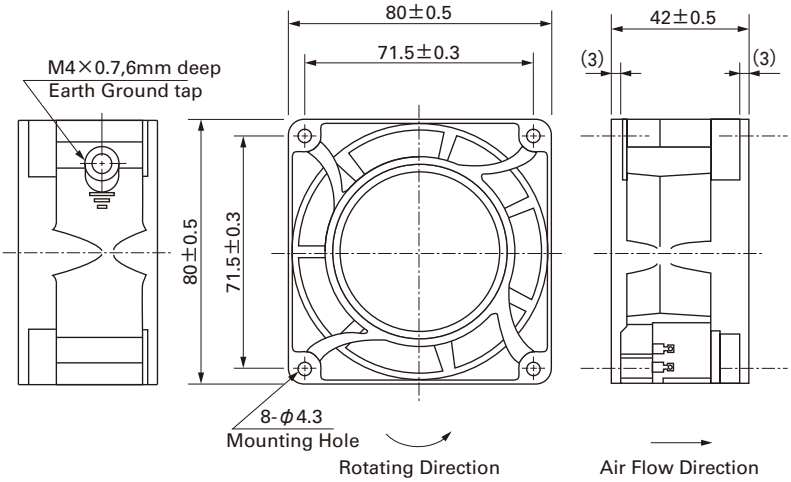

Reference dimension of mounting holes and vent opening (Unit : mm)

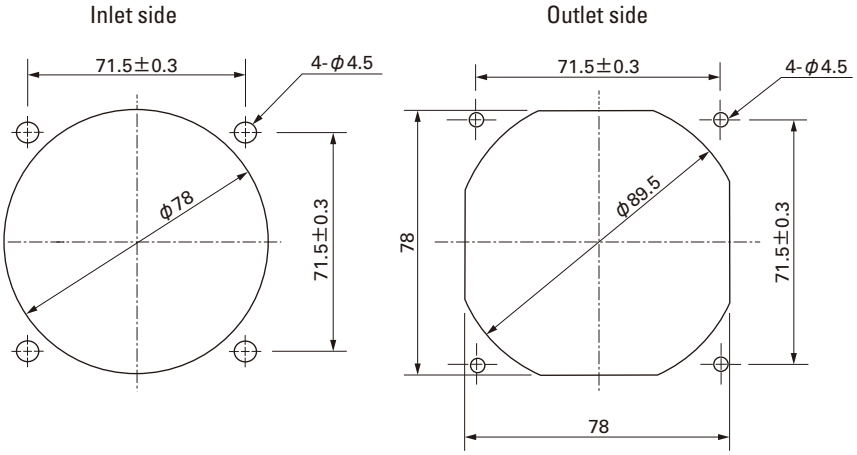

Wiring diagram

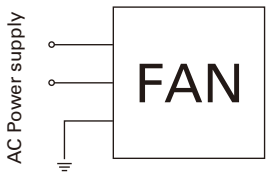

Options (Unit : mm)

Finger guards

Model : 109-049C Surface treatment : Nickel-chrome plating (silver) Color

Outlet side

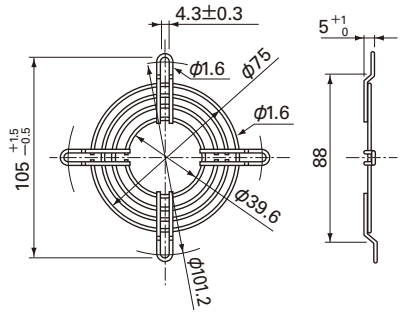

Model : 109-049E Surface treatment : Nickel-chrome plating (silver) Color
: 109-049H : Cation electropainting (black)

Inlet side, Outlet side

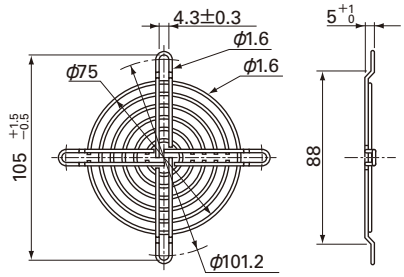

Resin finger guards

Model : 109-1002G

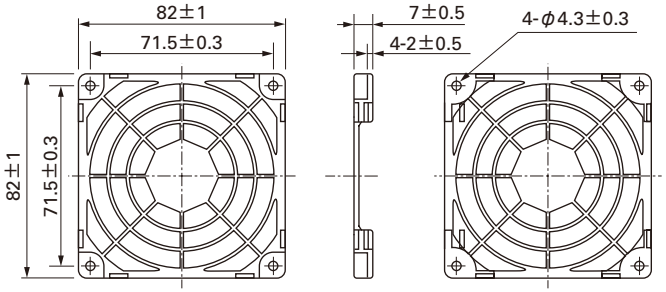

Resin filter kits

Model : 109-1002F13 (13PPI), 109-1002F20 (20PPI)
: 109-1002F30 (30PPI), 109-1002F40 (40PPI)

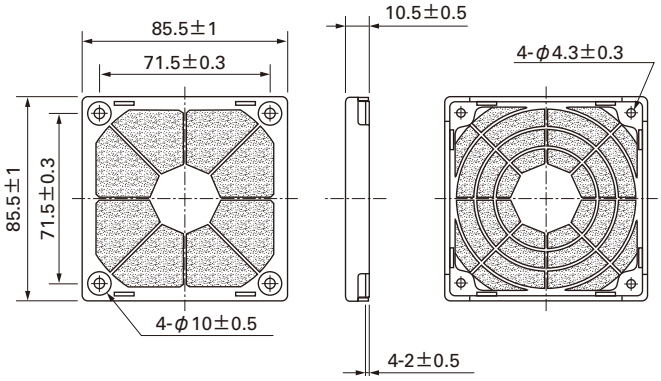

Plug cord

(Products compliant with Electrical Appliance and Material Safety Law)
Model : 489-008-L10/489-008-L21/489-008-L35

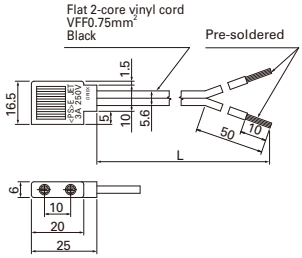

Model	Power cord length(mm)
— L10	1,000
— L21	2,100
— L35	3,500

Air Flow - Static Pressure Characteristics

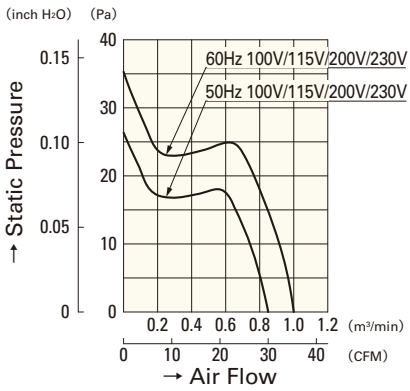

109-040UL
109-043UL
109-041UL
109-044UL

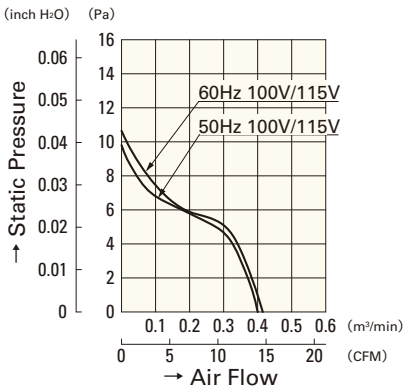

109-047UL
109-033UL

AC Fan

92 mm sq.

San Ace 92

25mm thick, 25mm thick (with Sensor)

General Specifications

- Material ····· Frame: Aluminum, Impeller:Plastics (Flammability: UL94V-1)
- Expected Life ····· Varies for each model (L10:Survival rate: 90% at 60℃, rated voltage,and continuously run in a free air state)
- Dielectric Strength ····· 50/60Hz 1,500VAC 1minute (between input terminal and frame)
- Dielectric Strength (With Sensor) ··· between AC input and DC input(Sensor output)
  : 50/60Hz 1,000VAC 1minute
  between AC input and G
  : 50/60Hz 1,500VAC 1minute,
  between G and DC input(Sensor output)
  : 50/60Hz 1,000VAC 1minute
- Sensor-Purpose Lead Wire ··· ⊕ brown ⊖ black (Sensor) yellow

92×92×25mm 〔Mass：290g / 310g (with Sensor)〕

Specifications Standard

※ represents low-speed.

Model No.	Voltage [V]	Frequency [Hz]	Input [W]	Current [A]	Locked Rotor Current [A]	Rated Speed [min⁻¹]	Max. Air Flow [m³/min]	Max. Air Flow [CFM]	Max. Static Pressure [Pa]	Max. Static Pressure [inchH₂O]	SPL [dB(A)]	Operating Temperature [℃]	Expected Life [h]
109S091	100	50/60	8/7	0.1 /0.09	0.13/0.12	2,700/3,100	0.95/1.1	33.6/38.9	39.2/49.0	0.157/0.197	35/38	−30 to +60	25,000
109S093	115			0.09/0.08	0.11/0.1								
109S092	200		11/10	0.07/0.06	0.08/0.08								
109S094	230		10/9	0.06/0.05	0.07/0.07								
109S095	100		8/7	0.1 /0.09	0.11/0.1	2,400/2,800	0.84/0.98	29.7/34.6	31.4/40.2	0.126/0.161	32/35		
109S096 ※	100		7/6	0.09/0.08	0.09/0.08	1,500/1,700	0.55/0.65	19.4/23	12.5/16.3	0.050/0.065	24/27		
109S193 ※	115			0.08/0.07	0.08/0.07								
109S192 ※	200		8/7	0.06/0.05	0.06/0.05								
109S194 ※	230			0.05/0.04	0.05/0.04								

with Sensor

※ represents low-speed.

Model No.	Voltage [V]	Frequency [Hz]	Input [W]	Current [A]	Locked Rotor Current [A]	Rated Speed [min⁻¹]	Max. Air Flow [m³/min]	Max. Air Flow [CFM]	Max. Static Pressure [Pa]	Max. Static Pressure [inchH₂O]	SPL [dB(A)]	Operating Temperature [℃]	Expected Life [h]
109S491	100	50/60	8/7	0.1 /0.09	0.13/0.12	2,700/3,100	0.95/1.1	33.6/38.9	39.2/49.0	0.157/0.197	35/38	−10 to +60	25,000
109S493	115			0.09/0.08	0.11/0.1								
109S492	200		11/10	0.07/0.06	0.08/0.08								
109S494	230		10/9	0.06/0.05	0.07/0.07								
109S495	100		8/7	0.1 /0.09	0.11/0.1	2,400/2,800	0.84/0.98	29.7/34.6	31.4/40.2	0.126/0.161	32/35		
109S496 ※			7/6	0.09/0.08	0.09/0.08	1,500/1,700	0.55/0.65	19.4/23	12.5/16.3	0.050/0.065	24/27		

Two types of power supplies, 5V and 12V, are available in fans with sensor attached.

Dimensions (Unit : mm)

Standard

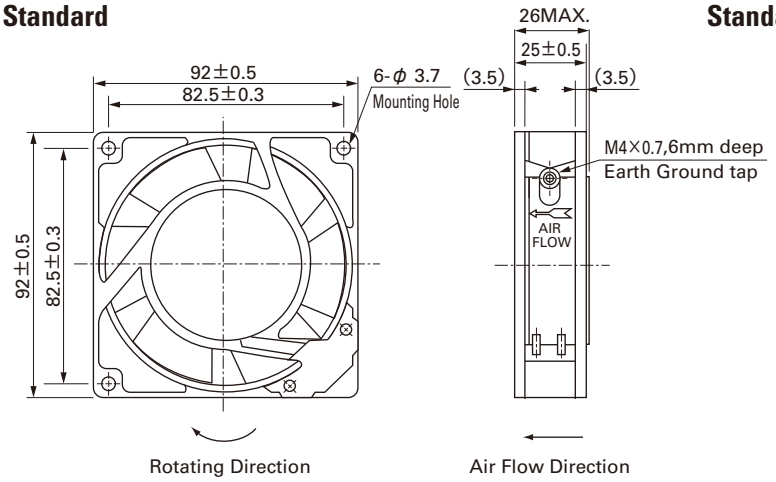

with Sensor

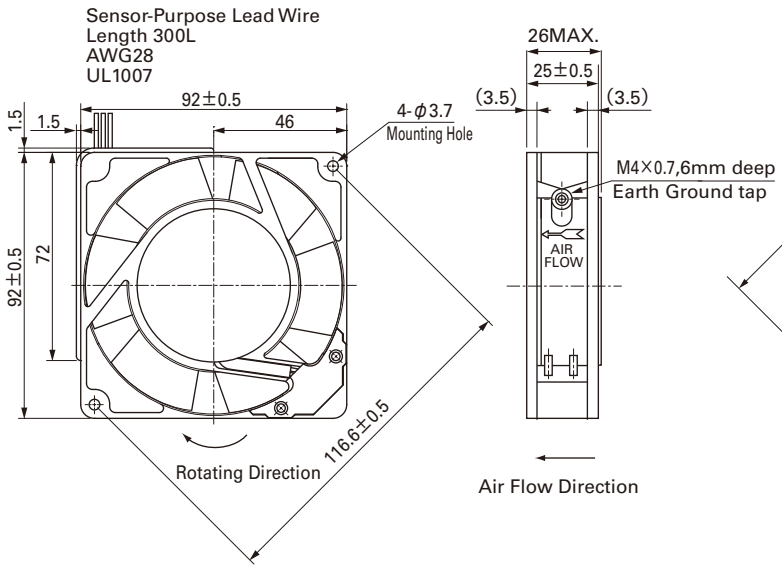

Reference dimension of mounting holes and vent opening (Unit : mm)

Standard

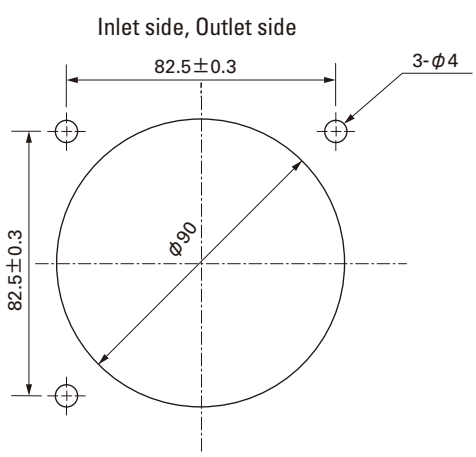

with Sensor

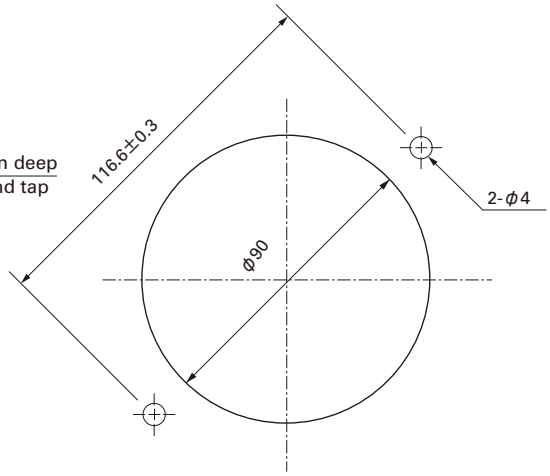

Wiring diagram

Standard

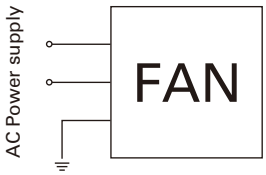

with Sensor

(For fan power supply)

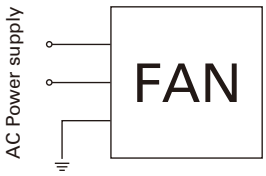

5V

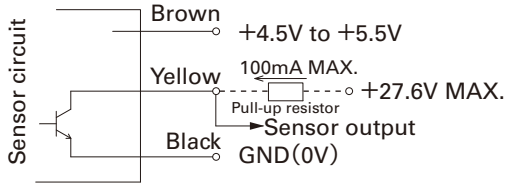

12V

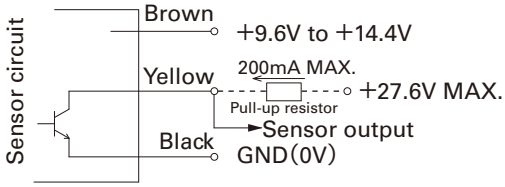

GND (Black) should be shared in case that power supply for sensor circuit (Brown) and that for sensor pull-up (Yellow) are separated.

92mm

92 mm sq.

San Ace 92

92×92×25mm 〔Mass：290g / 310g（with Sensor）〕

Options（Unit : mm）

Finger guards

Model：109-099C Surface treatment：Nickel-chrome plating (silver) Color

Outlet side

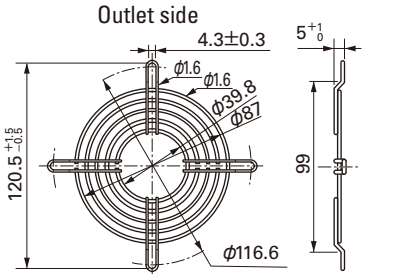

Model：109-099E Surface treatment：Nickel-chrome plating (silver) Color
：109-099H ：Cation electropainting (black)

Inlet side, Outlet side

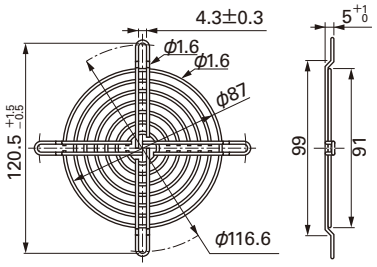

Resin finger guards

Model：109-1001G

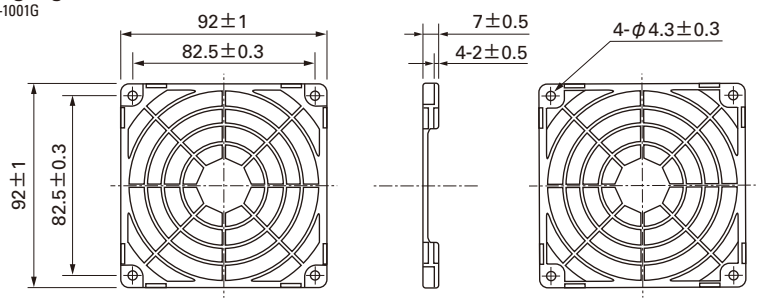

Resin filter kits

Model：109-1001F13 (13PPI)，109-1001F20 (20PPI)
：109-1001F30 (30PPI)，109-1001F40 (40PPI)

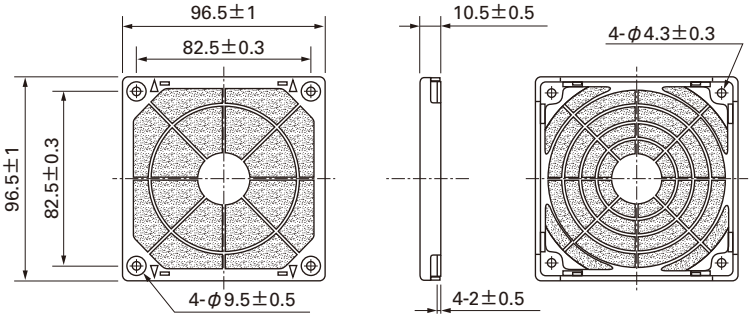

Plug cord

(Products compliant with Electrical Appliance and Material Safety Law)
Model：489-016-L10/489-016-L21

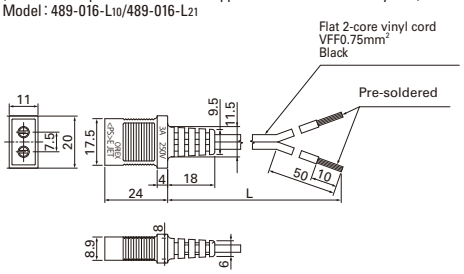

(UL/CSA CERTIFIED)
UL FILE No.E50197 CSA FILE No.LR67048
Model：489-047-L10/489-047-L21

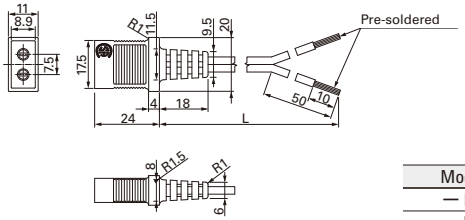

Model	Power cord length(mm)
— L10	1,000
— L21	2,100

Air Flow - Static Pressure Characteristics

Standard

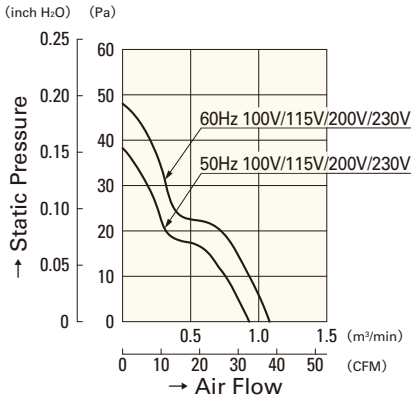

109S091
109S093
109S092
109S094

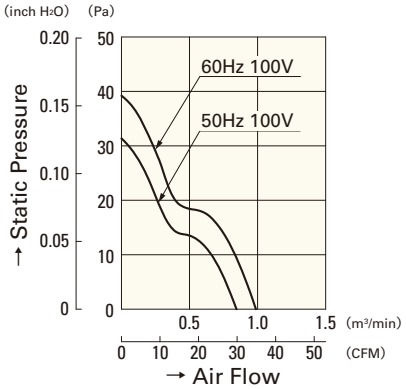

109S095

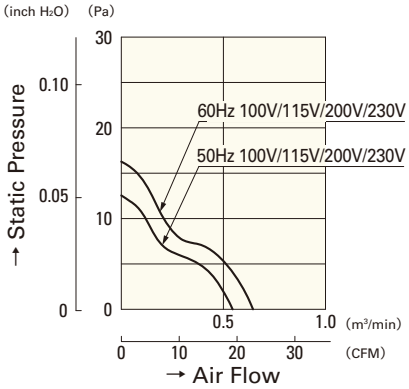

109S096
109S193
109S192
109S194

with Sensor

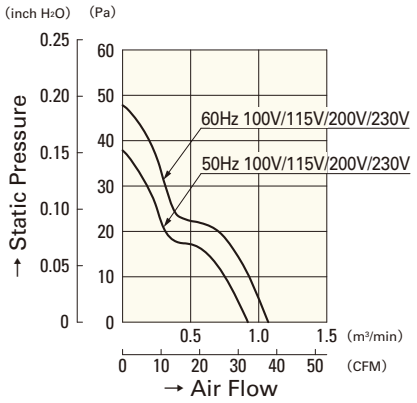

109S491
109S493
109S492
109S494

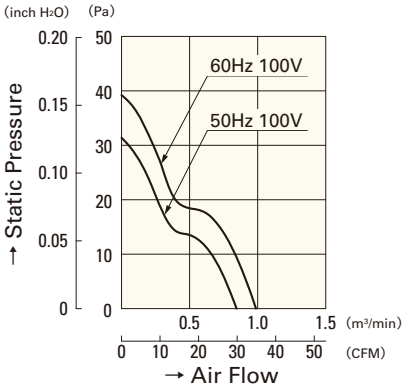

109S495

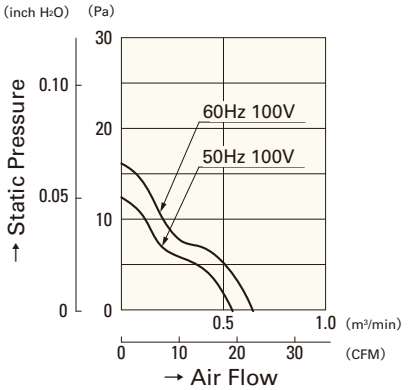

109S496

120 mm sq.

San Ace 120

25mm thick, 25mm thick (with Sensor)
38mm thick, 38mm thick (with Sensor)

General Specifications

- Material ····· Frame: Aluminum, Impeller:Plastics (Flammability: UL94V-1)
- Expected Life ····· Varies for each model (L10:Survival rate: 90% at 60℃, rated voltage,and continuously run in a free air state)
- Dielectric Strength ····· 50/60Hz 1,500VAC 1minute (between input terminal and frame)
- Dielectric Strength (With Sensor) ··· between AC input and DC input(Sensor output)
  : 50/60Hz 1,000VAC 1minute
  between AC input and G
  : 50/60Hz 1,500VAC 1minute,
  between G and DC input(Sensor output)
  : 50/60Hz 1,000VAC 1minute
- Sensor-Purpose Lead Wire ··· ⊕ brown ⊖ black (Sensor) yellow

120×120×25mm 〔Mass：370g / 390g (with Sensor)〕

Specifications Standard

※ represents low-speed.

Model No.	Voltage [V]	Frequency [Hz]	Input [W]	Current [A]	Locked Rotor Current [A]	Rated Speed [min⁻¹]	Max. Air Flow [m³/min]	Max. Air Flow [CFM]	Max. Static Pressure [Pa]	Max. Static Pressure [inchH₂O]	SPL [dB(A)]	Operating Temperature [℃]	Expected Life [h]
109S085	100	50/60	13.5/12	0.16/0.14	0.19/0.17	2,500/2,900	1.95/2.3	68.9/81.3	48 /51.9	0.193/0.216	38/41	−30 to +60	25,000
109S084	115			0.14/0.12	0.16/0.15								
109S088	200			0.08/0.07	0.1 /0.09								
109S087	230			0.07/0.06	0.08/0.07								
109S081	100		9.5/8.5	0.11	0.11/0.1	2,200/2,350	1.7 /1.8	60.1/63.6	29.4/26.5	0.118/0.106	34/35		
109S083	115			0.1	0.1 /0.09								
109S082	200			0.07	0.07/0.06								
109S089	230			0.06	0.06/0.05								
109S086 ※	100		12/10	0.14/0.12	0.15/0.13	1,400/1,600	1.1 /1.25	38.9/44.2	14.7/18.6	0.059/0.075	24/27		

with Sensor

※ represents low-speed.

Model No.	Voltage [V]	Frequency [Hz]	Input [W]	Current [A]	Locked Rotor Current [A]	Rated Speed [min⁻¹]	Max. Air Flow [m³/min]	Max. Air Flow [CFM]	Max. Static Pressure [Pa]	Max. Static Pressure [inchH₂O]	SPL [dB(A)]	Operating Temperature [℃]	Expected Life [h]
109S485	100	50/60	13.5/12	0.16/0.14	0.19/0.17	2500/2900	1.95/2.3	68.9/81.3	48 /51.9	0.193/0.216	38/41	−10 to +60	25,000
109S484	115			0.14/0.12	0.16/0.15								
109S488	200			0.08/0.07	0.1 /0.09								
109S487	230			0.07/0.06	0.08/0.07								
109S486※	100		12/10	0.14/0.12	0.15/0.13	1400/1600	1.1 /1.25	38.9/44.2	14.7/18.6	0.059/0.075	24/27		

Two types of power supplies, 5V and 12V, are available in fans with sensor attached.

Dimensions (Unit : mm)

Standard

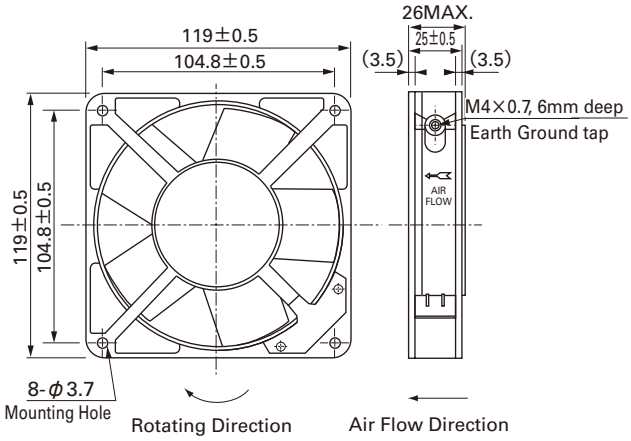

Reference dimension of mounting holes and vent opening (Unit : mm)

Inlet side, Outlet side

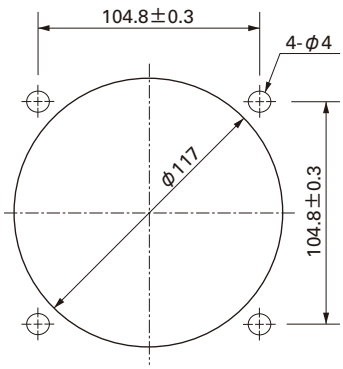

with Sensor

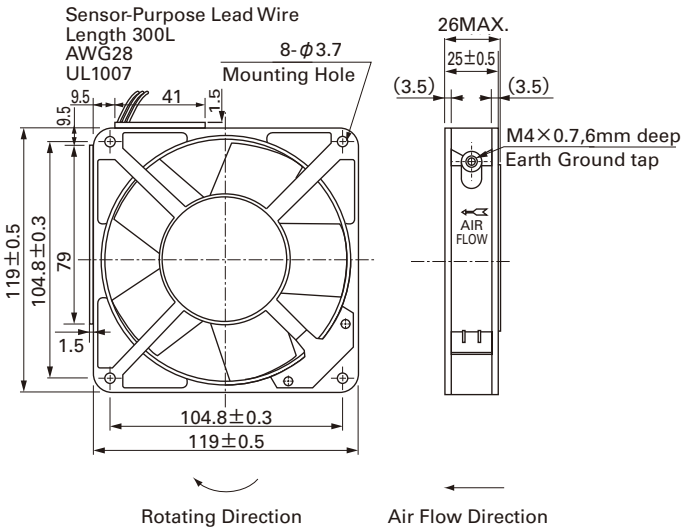

Wiring diagram

Standard

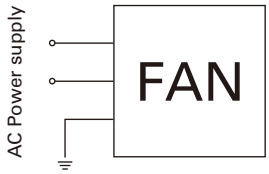

with Sensor

(For fan power supply)

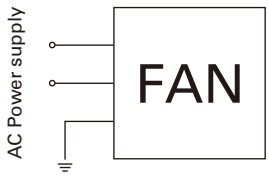

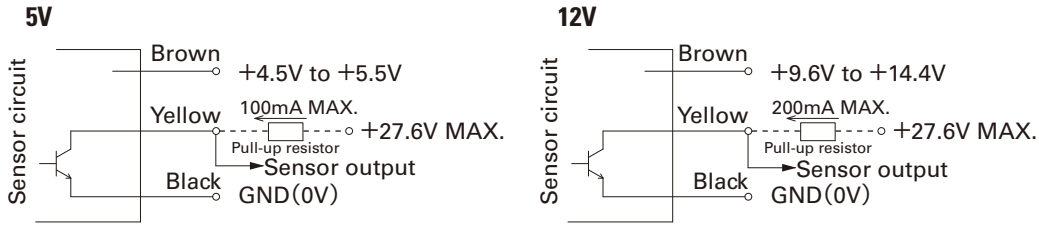

GND (Black) should be shared in case that power supply for sensor circuit (Brown) and that for sensor pull-up (Yellow) are separated.

120 mm sq.

San Ace 120

120×120×25mm 〔Mass：370g / 390g（with Sensor）〕

Options（Unit : mm）

Finger guards

Model：109-019C　Surface treatment：Nickel-chrome plating (silver)
：109-019H　：Cation electropainting (black)

Color

Outlet side

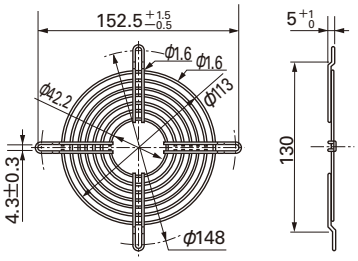

Model：109-019E　Surface treatment：Nickel-chrome plating (silver)
：109-019K　：Cation electropainting (black)

Color

Inlet side, Outlet side

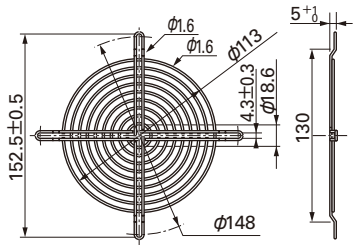

Resin finger guards

Model：109-1000G

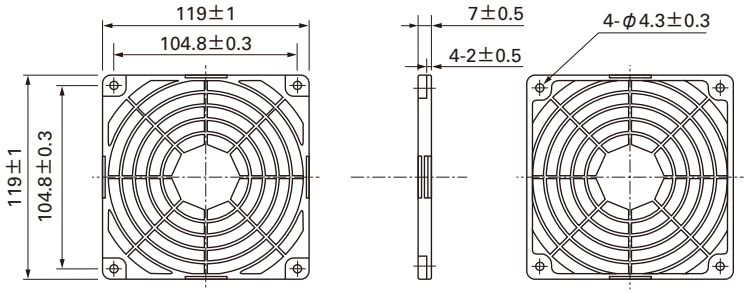

Resin filter kits

Model：109-1000F13 (13PPI)，109-1000F20 (20PPI)
：109-1000F30 (30PPI)，109-1000F40 (40PPI)

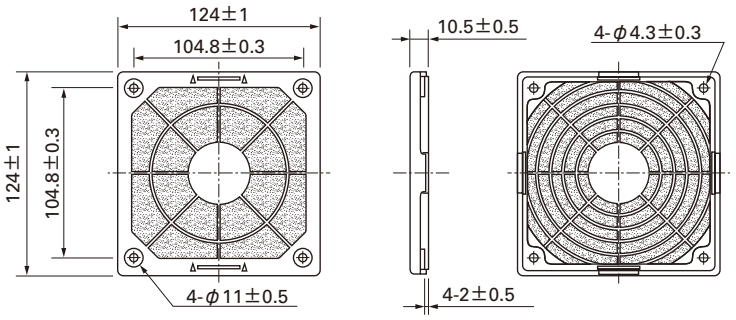

Plug cord

(Products compliant with Electrical Appliance and Material Safety Law)
Model：489-016-L10/489-016-L21

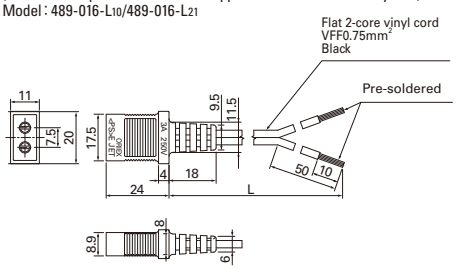

(UL/CSA CERTIFIED)
UL FILE No.E50197 CSA FILE No.LR67048
Model：489-047-L10/489-047-L21

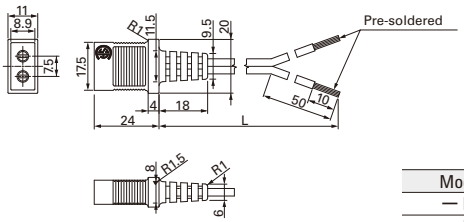

Model	Power cord length(mm)
— L10	1,000
— L21	2,100

Air Flow - Static Pressure Characteristics

Standard

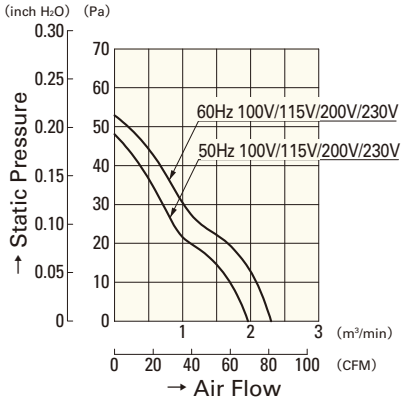

109S085
109S084
109S088
109S087

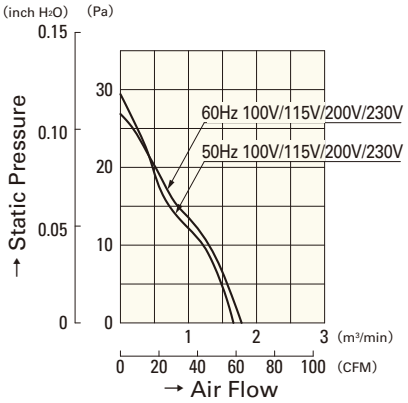

109S081
109S083
109S082
109S089

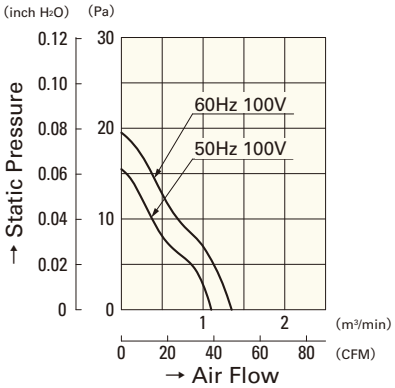

109S086

with Sensor

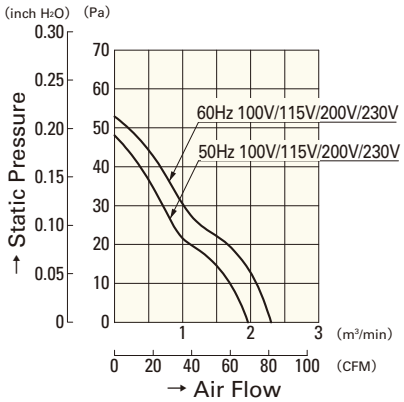

109S485
109S484
109S488
109S487

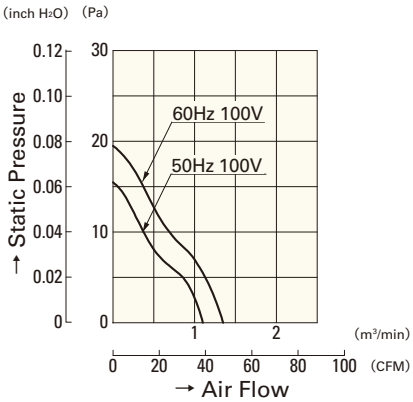

109S486

120 mm sq.

San Ace 120

25mm thick, 25mm thick (with Sensor)
38mm thick, 38mm thick (with Sensor)

General Specifications

- Material ····· Frame: Aluminum, Impeller:Plastics (Flammability: UL94V-1)
- Expected Life ····· Varies for each model (L10:Survival rate: 90% at 60℃, rated voltage,and continuously run in a free air state)
- Dielectric Strength ····· 50/60Hz 1,500VAC 1minute (between input terminal and frame)
- Dielectric Strength (With Sensor) ··· between AC input and DC input(Sensor output)
  : 50/60Hz 1,000VAC 1minute
  between AC input and G
  : 50/60Hz 1,500VAC 1minute,
  between G and DC input(Sensor output)
  : 50/60Hz 1,000VAC 1minute
- Sensor-Purpose Lead Wire ··· ⊕ brown ⊖ black (Sensor) yellow

120×120×38mm 〔Mass：550g / 580g (with Sensor)〕

Specifications Standard

※ represents low-speed.

Model No.	Voltage [V]	Frequency [Hz]	Input [W]	Current [A]	Locked Rotor Current [A]	Rated Speed [min⁻¹]	Max. Air Flow [m³/min]	Max. Air Flow [CFM]	Max. Static Pressure [Pa]	Max. Static Pressure [inchH₂O]	SPL [dB(A)]	Operating Temperature [℃]	Expected Life [h]
109S075UL	100	50/60	18/16	0.24/0.21	0.32/0.28	2,700/3,100	2.5 /2.9	88.3/102.5	57.9/68.7	0.233/0.276	42/45	−30 to +60	25,000
109S074UL	115			0.21/0.18	0.27/0.24								
109S078UL	200			0.12/0.1	0.16/0.14								
109S072UL	230			0.11/0.09	0.14/0.13								
109S005	100		14/12	0.18/0.16	0.25/0.22	2,700/3,100	2.35/2.7	83 / 95.4	55.9/65.7	0.224/0.264	40/43		
109S005UL													
109S024	120			0.16/0.14	0.21/0.18								
109S024UL	115												
109S008	200			0.09/0.08	0.13/0.11								
109S008UL													
109S025	230			0.08/0.07	0.11/0.09								
109S025UL													
109S029UL	100		14/12	0.18/0.16	0.23/0.21	2,450/2,700	2.15/2.35	76 / 83	44.1/49.0	0.177/0.197	38/40		
109S013			13/11	0.16/0.14	0.16/0.15	1,800/2,000	1.55/1.75	54.8/ 60.8	23.5/26.4	0.094/0.106	30/32		
109S013UL													
109S006 ※			7/7	0.1 /0.09	0.1 /0.09	1,650/1,700	1.45/1.5	51.2/ 53	17.6/17.6	0.071/0.071	28/28		
109S006UL※													
	115		10/10	0.13/0.11	0.13/0.11	1,800/1,900	1.56/1.64	55 / 57.9	20 /20.6	0.080/0.083	30/31		
109S010 ※	200		7/7	0.05/0.04	0.05/0.04	1,650/1,700	1.45/1.5	51.2/ 53	17.6/17.6	0.071/0.071	28/28		
109S010UL※													
	240		11/11	0.06/0.05	0.06/0.05	1,800/1,950	1.58/1.68	55.8/ 59.3	20.6/21.6	0.083/0.087	30/32		

with Sensor

※ represents low-speed.

Model No.	Voltage [V]	Frequency [Hz]	Input [W]	Current [A]	Locked Rotor Current [A]	Rated Speed [min⁻¹]	Max. Air Flow [m³/min]	Max. Air Flow [CFM]	Max. Static Pressure [Pa]	Max. Static Pressure [inchH₂O]	SPL [dB(A)]	Operating Temperature [℃]	Expected Life [h]
109S405UL	100	50/60	14/12	0.18/0.16	0.25/0.22	2,700/3,100	2.35/2.7	83/95.4	55.9/65.7	0.224/0.264	40/43	−10 to +60	25,000
109S424UL	115			0.16/0.14	0.21/0.18								
109S408UL	200			0.09/0.08	0.13/0.11								
109S425UL	230			0.08/0.07	0.11/0.09								
109S429UL	100			0.18/0.16	0.23/0.21	2,450/2,700	2.15/2.35	76/83	44.1/49.0	0.177/0.197	38/40		
109S406UL※			7/6	0.09/0.08	0.1 /0.09	1,650/1,700	1.45/1.5	51/53	17.7/17.7	0.071/0.071	28/28		
109S475UL	100		18/16	0.24/0.21	0.32/0.28	2,700/3,100	2.5 /2.9	88.3/102.4	57.9/68.7	0.233/0.276	42/45		
109S474UL	115			0.21/0.18	0.27/0.24								
109S478UL	200			0.12/0.1	0.16/0.14								
109S472UL	230			0.11/0.09	0.14/0.13								

Two types of power supplies, 5V and 12V, are available in fans with sensor attached.

Dimensions (Unit : mm)

Standard

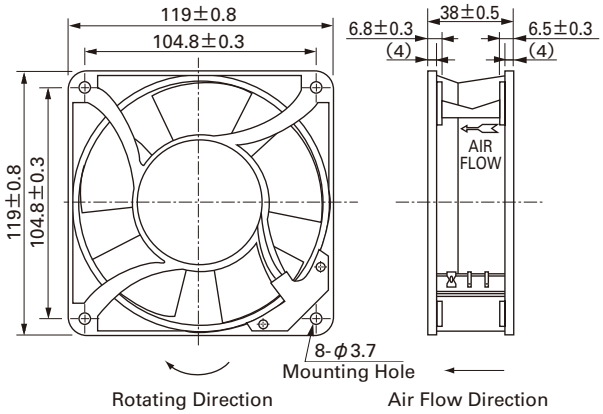

Reference dimension of mounting holes and vent opening (Unit : mm)

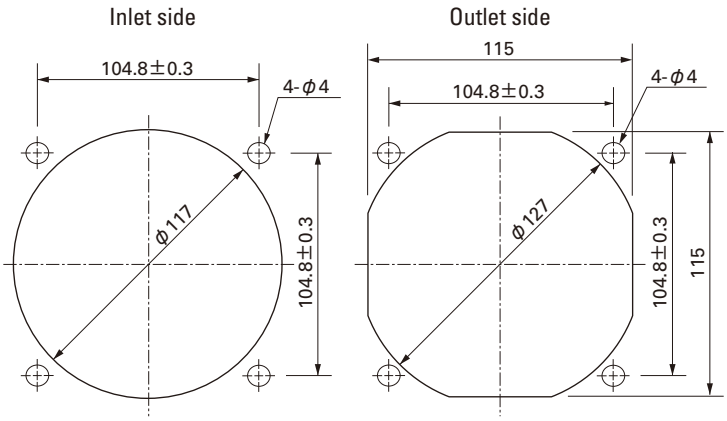

with Sensor

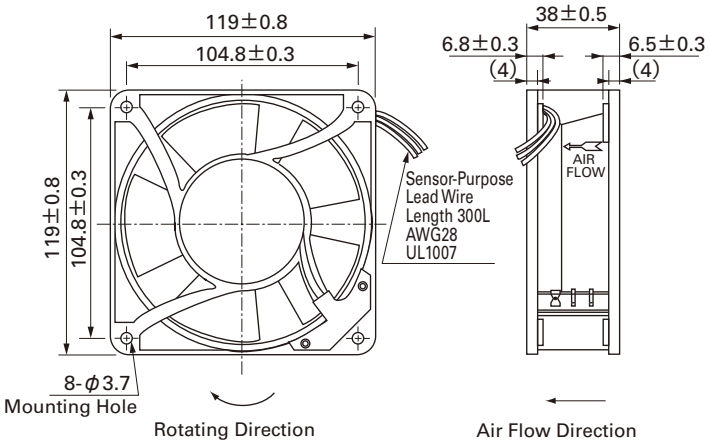

Wiring diagram

Standard

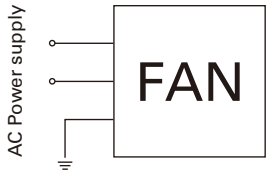

with Sensor

(For fan power supply)

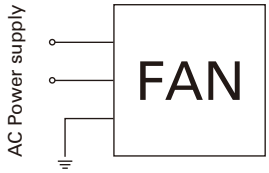

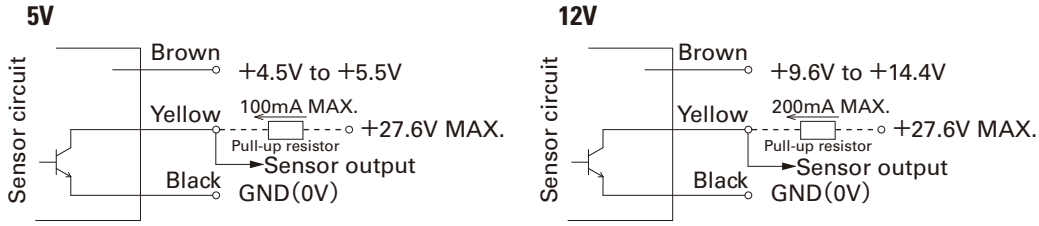

GND (Black) should be shared in case that power supply for sensor circuit (Brown) and that for sensor pull-up (Yellow) are separated.

120 mm sq.

San Ace 120

120×120×38mm 〔Mass：550g / 580g（with Sensor）〕

Options（Unit：mm）

Finger guards

Model：109-019C Surface treatment：Nickel-chrome plating (silver) Color
：109-019H ：Cation electropainting (black)

Outlet side

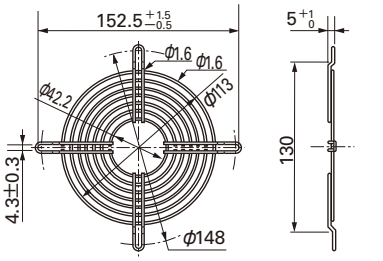

Model：109-019E Surface treatment：Nickel-chrome plating (silver) Color
：109-019K ：Cation electropainting (black)

Inlet side, Outlet side

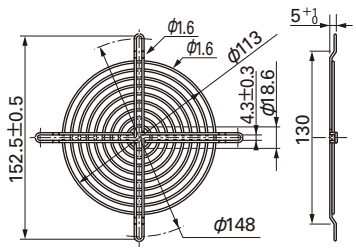

Resin finger guards

Model：109-1000G

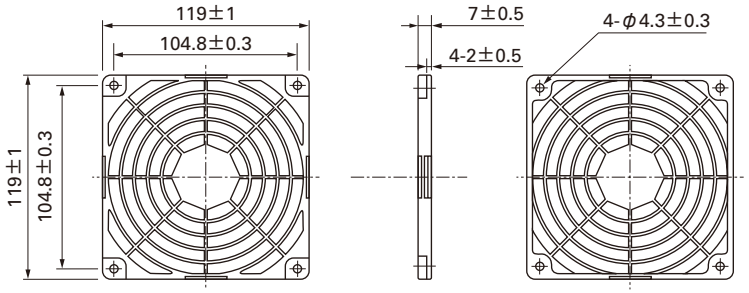

Resin filter kits

Model：109-1000F13 (13PPI)，109-1000F20 (20PPI)，109-1000F30 (30PPI)，109-1000F40 (40PPI)

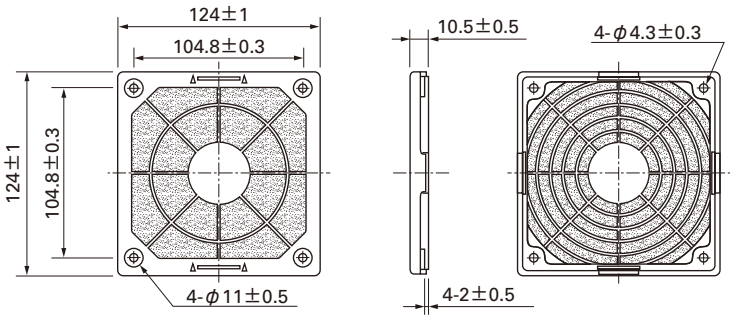

Filter kits

Model：109-018 Applicable models：AC Fan 120×120×38mm

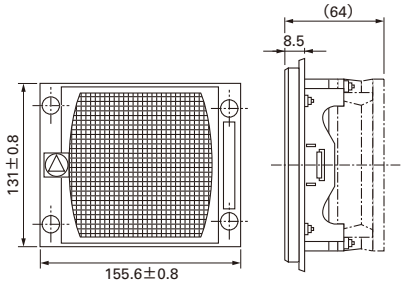

Screen kits

Model：109-020 Applicable models：AC Fan 120×120×38mm

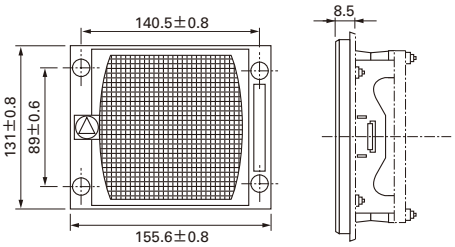

Neither filterkit nor screenkit can be installed on fans with sensor.

Plug cord

Exclusive for fans without UL at the end of the model number.

(Products compliant with Electrical Appliance and Material Safety Law)

Model：489-006-L10/489-006-L21/489-006-L35

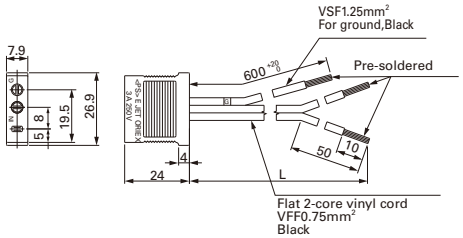

Exclusive for fans with UL at the end of the model number.

(Products compliant with Electrical Appliance and Material Safety Law)

Model：489-037-L10/489-037-L21/489-037-L35

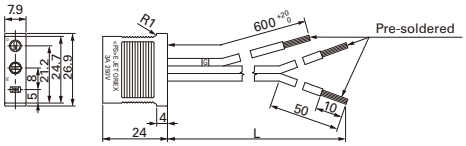

(UL/CSA CERTIFIED)

UL FILE No.E50197 CSA FILE No.LR67048

Model：489-007-L10/489-007-L21

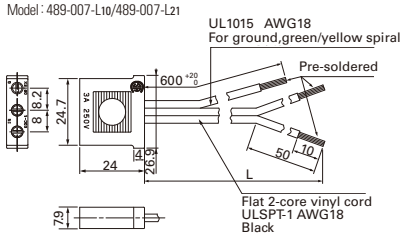

Model	Power cord length(mm)
— L10	1,000
— L21	2,100
— L35	3,500

Air Flow - Static Pressure Characteristics

Standard

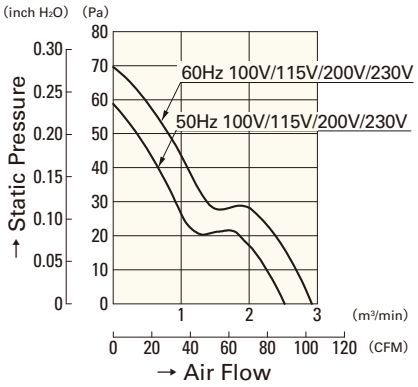

109S075UL	109S074UL
109S078UL	109S072UL

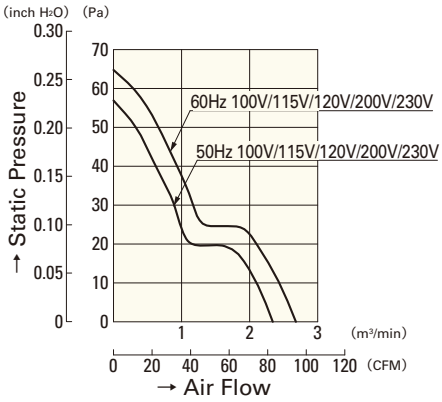

109S005	109S005UL
109S024	109S024UL
109S008	109S008UL
109S025	109S025UL

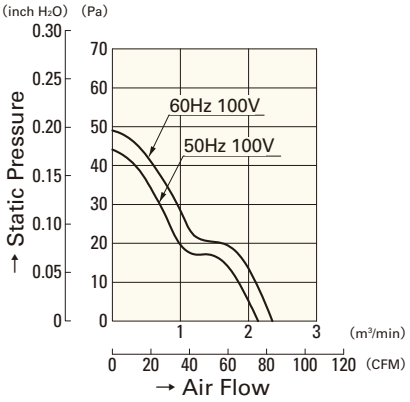

109S029UL

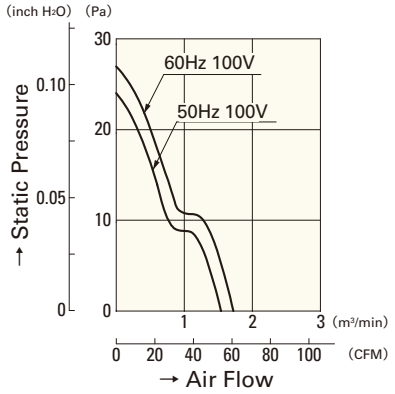

109S013
109S013UL

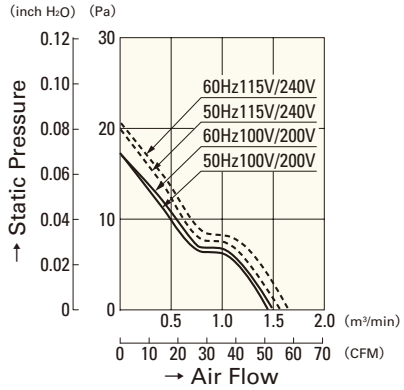

109S006	109S006UL
109S010	109S010UL

with Sensor

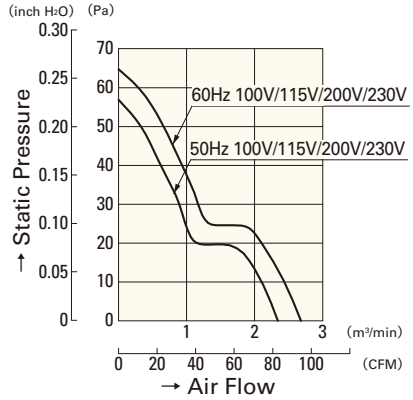

109S405UL	109S424UL
109S408UL	109S425UL

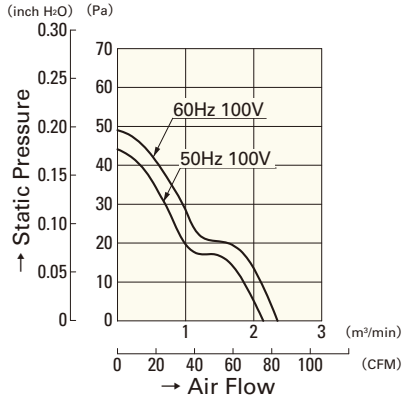

109S429UL

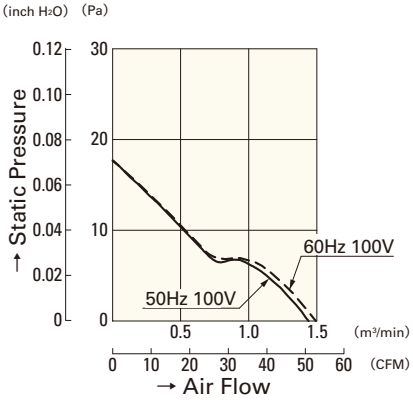

109S406UL

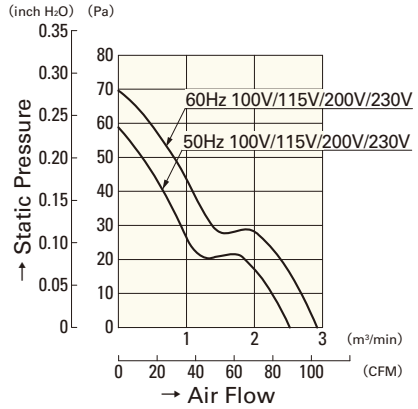

109S475UL	109S474UL
109S478UL	109S472UL

160 mm sq.

San Ace160

51mm thick
51mm thick (with Sensor)

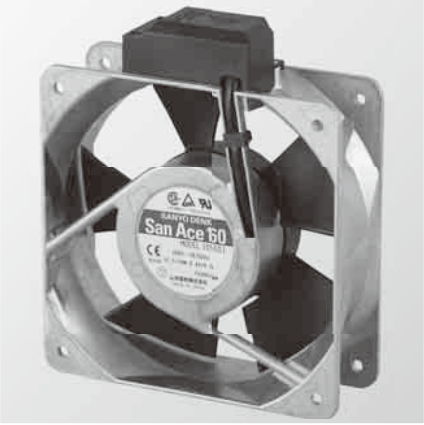

General Specifications

- Material ····· Frame: Aluminum, Impeller:Plastics (Flammability: UL94V-1)
- Expected Life ····· Varies for each model (L10:Survival rate: 90% at 60℃, rated voltage,and continuously run in a free air state)
- Dielectric Strength ····· 50/60Hz 1,500VAC 1minute (between input terminal and frame)
- Dielectric Strength (With Sensor) ··· between AC input and DC input(Sensor output)
  : 50/60Hz 1,000VAC 1minute
  between AC input and G
  : 50/60Hz 1,500VAC 1minute,
  between G and DC input(Sensor output)
  : 50/60Hz 1,000VAC 1minute
- Sensor-Purpose Lead Wire ··· ⊕ brown ⊖ black (Sensor) yellow

160×160×51mm 〔Mass : 1,100g / 1,100g (with Sensor)〕

Specifications Standard

Model No.	Voltage [V]	Frequency [Hz]	Input [W]	Current [A]	Locked Rotor Current [A]	Rated Speed [min⁻¹]	Max. Air Flow [m³/min]	Max. Air Flow [CFM]	Max. Static Pressure [Pa]	Max. Static Pressure [inchH₂O]	SPL [dB(A)]	Operating Temperature Range [℃]	Expected Life [h]
109-601	100	50/60	37.5/33	0.43/0.35	0.72/0.70	2,850/3,350	7.2/8.5	254.4/300.4	156.8/166.6	0.630/0.669	56/60	−30 to +60	25,000
109-604	115			0.39/0.31	0.62/0.61								
109-602	200			0.23/0.18	0.36/0.35								
109-603	230			0.21/0.16	0.32/0.31								

with Sensor

Model No.	Voltage [V]	Frequency [Hz]	Input [W]	Current [A]	Locked Rotor Current [A]	Rated Speed [min⁻¹]	Max. Air Flow [m³/min]	Max. Air Flow [CFM]	Max. Static Pressure [Pa]	Max. Static Pressure [inchH₂O]	SPL [dB(A)]	Operating Temperature Range [℃]	Expected Life [h]
109-641	100	50/60	37.5/33	0.43/0.35	0.72/0.70	2,850/3,350	7.2/8.5	254.4/300.4	156.8/166.6	0.630/0.669	56/60	−10 to +60	25,000
109-644	115			0.39/0.31	0.62/0.61								
109-642	200			0.23/0.18	0.36/0.35								
109-643	230			0.21/0.16	0.32/0.31								

Two types of power supplies, 5V and 12V, are available in fans with sensor attached.

Dimensions (Unit : mm)

Standard

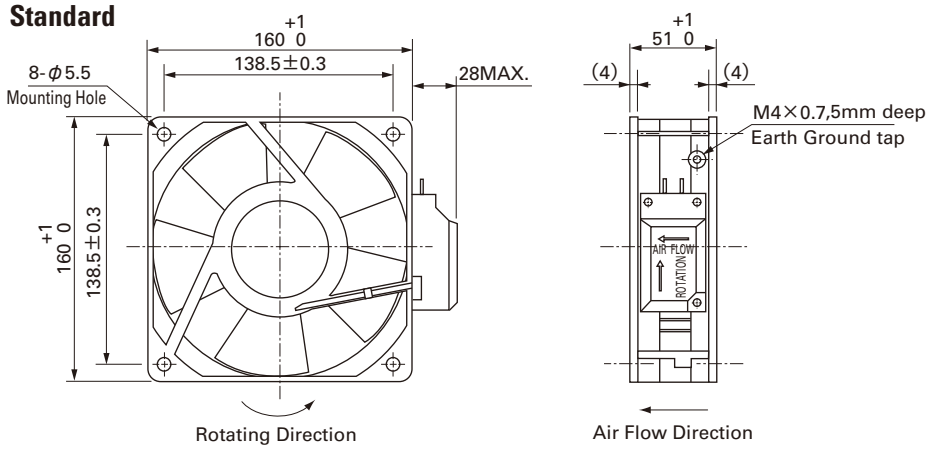

with Sensor

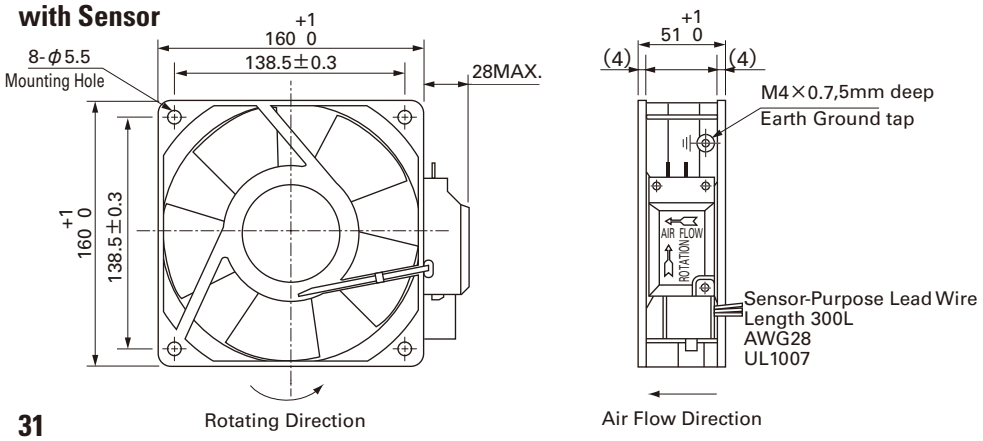

Reference dimension of mounting holes and vent opening (Unit : mm)

Inlet side, Outlet side

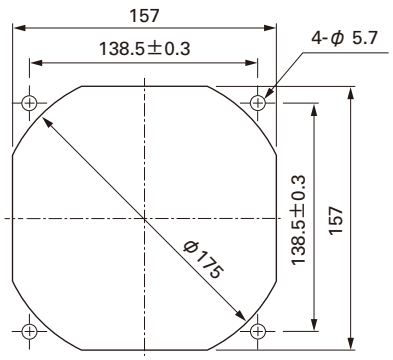

Wiring diagram

Standard

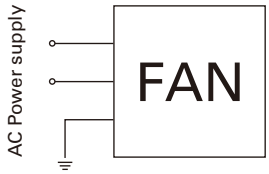

with Sensor

(For fan power supply)

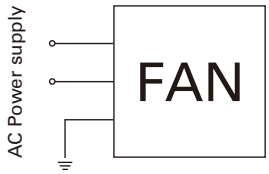

5V

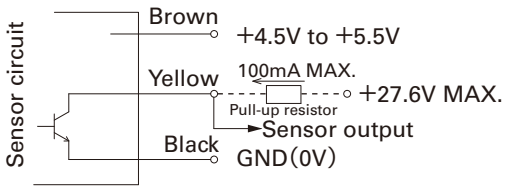

12V

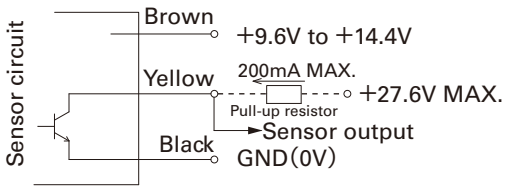

GND (Black) should be shared in case that power supply for sensor circuit (Brown) and that for sensor pull-up (Yellow) are separated.

Options (Unit : mm)

Finger guards

Model : 109-619E Surface treatment : Nickel-chrome plating (silver) Color

Inlet side, Outlet side

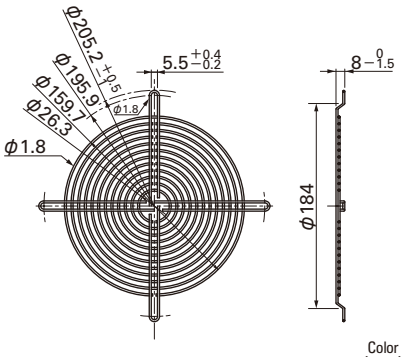

Model : 109-620 Surface treatment : Nickel-chrome plating (silver) Color

Outlet side

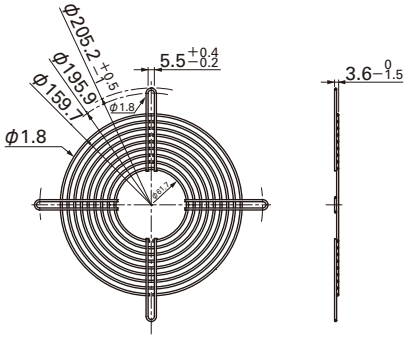

Plug cord

(UL/CSA CERTIFIED))
UL FILE No.E50197 CSA FILE No.LR67048
Model : 489-084-L10/489-084-L21

Flat 2-core vinyl cord
ULSPT-1
AWG18 Black

L-shaped

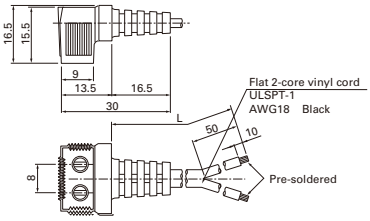

(UL/CSA CERTIFIED)
UL FILE No.E50197 CSA FILE No.LR67048
Model : 489-086-L10/489-086-L21

straight

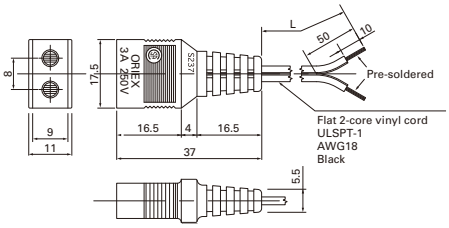

(Products compliant with Electrical Appliance and Material Safety Law)
Model : 489-1618-L10/489-1618-L21/489-1618-L28

straight

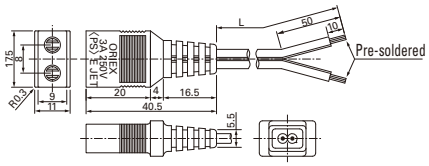

Model	Power cord length(mm)
— L10	1,000
— L21	2,100
— L28	2,800

(Products compliant with Electrical Appliance and Material Safety Law)
Model : 489-1619-L10/489-1619-L21

L-shaped

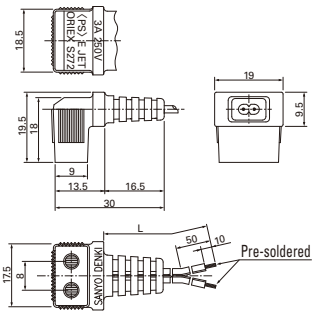

Air Flow - Static Pressure Characteristics

Standard

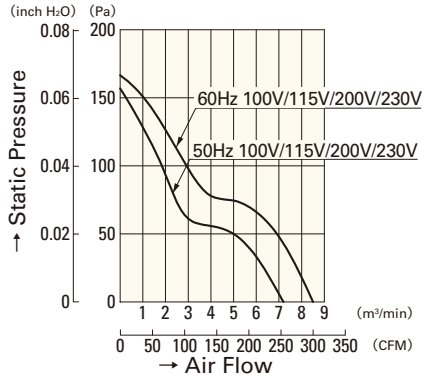

109-601	109-604
109-602	109-603

with Sensor

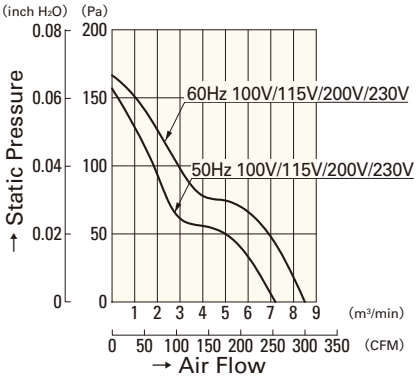

109-641	109-644
109-642	109-643

AC Fan

φ172mm

San Ace 172

51mm thick (Sidecut type)
51mm thick (Round type)
51mm thick (Round type /with sensor)

General Specifications

- Material ····· Frame: Aluminum, Impeller:Plastics (Flammability: UL94V-1)
- Expected Life ····· Varies for each model (L10:Survival rate: 90% at 60℃, rated voltage,and continuously run in a free air state)
- Dielectric Strength ····· 50/60Hz 1,500VAC 1minute (between input terminal and frame)

φ172mm×150mm×51mm (Mass : 1,000g) Sidecut type

Specifications

Model No.	Voltage [V]	Frequency [Hz]	Input [W]	Current [A]	Locked Rotor Current [A]	Rated Speed [min⁻¹]	Max. Air Flow [m³/min]	Max. Air Flow [CFM]	Max. Static Pressure [Pa]	Max. Static Pressure [inchH₂O]	SPL [dB(A)]	Operating Temperature [℃]	Expected Life [h]
109S301	100	50/60	27/25	0.33/0.25	0.65/0.64	2,900/3,500	5.3/6.4	187.3/226.1	147/196	0.590/0.787	51/56	−30 to +60	25,000
109S304	115			0.29/0.22	0.55/0.54								
109S302	200			0.16/0.13	0.33/0.32								
109S303	230			0.14/0.11	0.28/0.27								

Dimensions (Unit : mm)

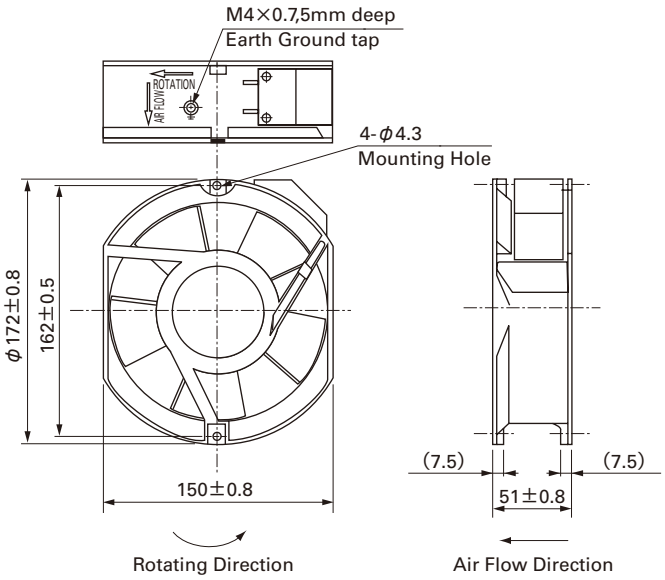

Reference dimension of mounting holes and vent opening (Unit : mm)

Inlet side, Outlet side

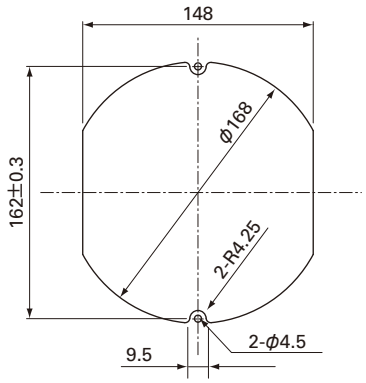

Wiring diagram

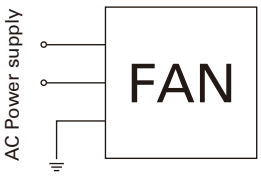

Options (Unit : mm)

Finger guards

Model : 109-319E Surface treatment : Nickel-chrome plating (silver) Color
: 109-319H : Cation electropainting (black)

Model : 109-320 Surface treatment : Nickel-chrome plating (silver) Color

Inlet side, Outlet side

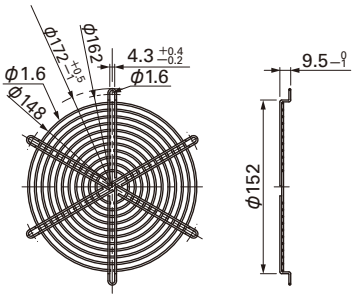

Outlet side

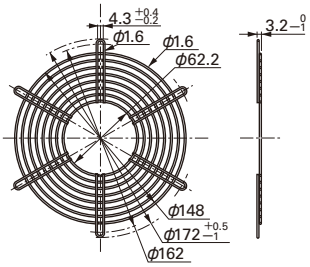

Plug cord

(Products compliant with Electrical Appliance and Material Safety Law)
Model : 489-1619-L10/489-1619-L21

L-shaped

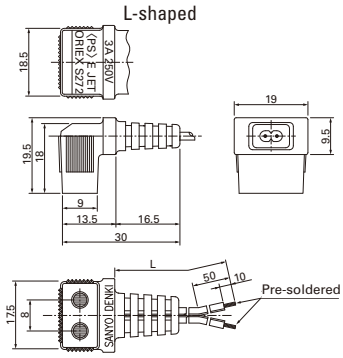

(UL/CSA CERTIFIED)
UL FILE No.E50197 CSA FILE No.LR67048
Model No. : 489-084-L10/489-084-L21

L-shaped

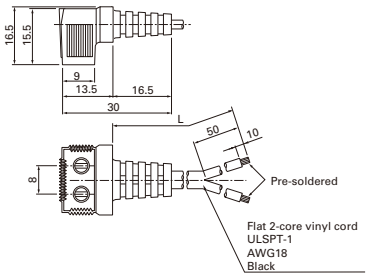

Model	Power cord length(mm)
— L10	1,000
— L21	2,100

Air Flow - Static Pressure Characteristics

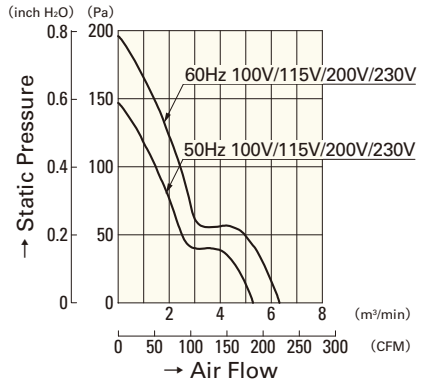

109S301	109S304
109S302	109S303

φ172mm

San Ace 172

51mm thick (Sidecut type)
51mm thick (Round type)
51mm thick (Round type /with sensor)

General Specifications

- Material ····· Frame: Aluminum, Impeller:Plastics (Flammability: UL94V-1)
- Expected Life ····· Varies for each model (L10:Survival rate: 90% at 60℃ , rated voltage,and continuously run in a free air state)
- Dielectric Strength ····· 50/60Hz 1,500VAC 1minute (between input terminal and frame)
- Dielectric Strength (With Sensor) ··· between AC input and DC input(Sensor output)
  : 50/60Hz 1,000VAC 1minute
  between AC input and G
  : 50/60Hz 1,500VAC 1minute,
  between G and DC input(Sensor output)
  : 50/60Hz 1,000VAC 1minute
- Sensor-Purpose Lead Wire ··· ⊕ brown ⊖ black (Sensor) yellow

φ172mm×51mm 〔Mass : 1,000g〕 Round type

Specifications Standard

Model No.	Voltage [V]	Frequency [Hz]	Input [W]	Current [A]	Locked Rotor Current [A]	Rated Speed [min⁻¹]	Max. Air Flow [m³/min]	[CFM]	Max. Static Pressure [Pa]	[inchH₂O]	SPL [dB(A)]	Operating Temperature [℃]	Expected Life [h]
109-311	100	50/60	27/25	0.33/0.25	0.65/0.64	2,900/3,500	5.3/6.4	187.3/226.1	147/196	0.590/0.787	47/51	−30 to +60	25,000
109-314	115			0.29/0.22	0.55/0.54								
109-312	200			0.16/0.13	0.33/0.32								
109-313	230			0.14/0.11	0.28/0.27								

with Sensor

Model No.	Voltage [V]	Frequency [Hz]	Input [W]	Current [A]	Locked Rotor Current [A]	Rated Speed [min⁻¹]	Max. Air Flow [m³/min]	[CFM]	Max. Static Pressure [Pa]	[inchH₂O]	SPL [dB(A)]	Operating Temperature [℃]	Expected Life [h]
109-371	100	50/60	27/25	0.33/0.25	0.65/0.64	2,900/3,500	5.3/6.4	187.3/226.1	147/196	0.590/0.787	47/51	−10 to +60	25,000
109-374	115			0.29/0.22	0.55/0.54								
109-372	200			0.16/0.13	0.33/0.32								
109-373	230			0.14/0.11	0.28/0.27								

Two types of power supplies, 5V and 12V, are available in fans with sensor attached.

Dimensions (Unit : mm)

Standard

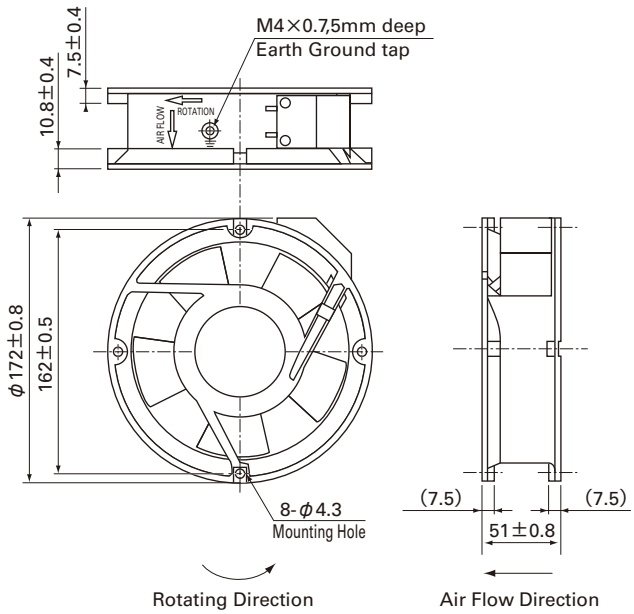

with Sensor

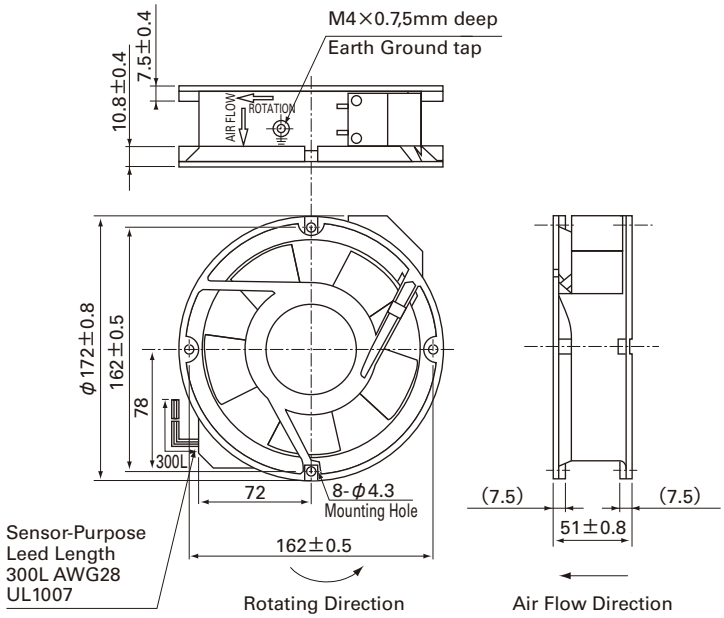

Reference dimension of mounting holes and vent opening (Unit : mm)

Inlet side, Outlet side

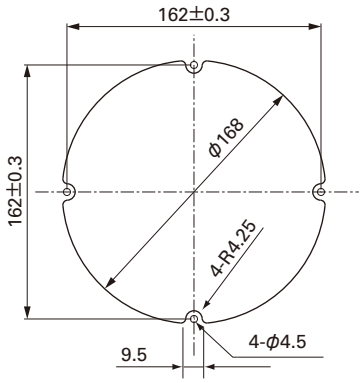

Wiring diagram

Standard

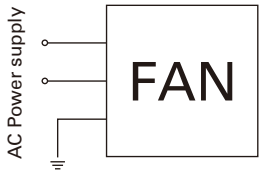

with Sensor

(For fan power supply)

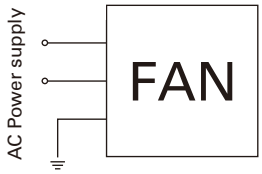

5V

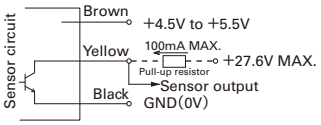

12V

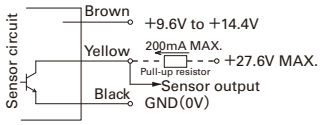

GND (Black) should be shared in case that power supply for sensor circuit (Brown) and that for sensor pull-up (Yellow) are separated.

Options (Unit : mm)

Finger guards

Model : 109-319E Surface treatment : Nickel-chrome plating (silver) Color
: 109-319H : Cation electropainting (black)

Inlet side, Outlet side

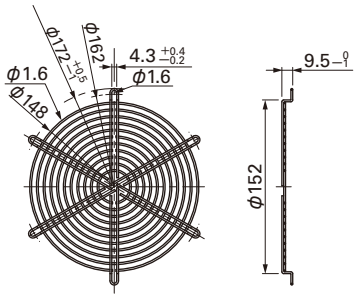

Model : 109-1066 Surface treatment : Nickel-chrome plating (silver) Color

Inlet side, Outlet side

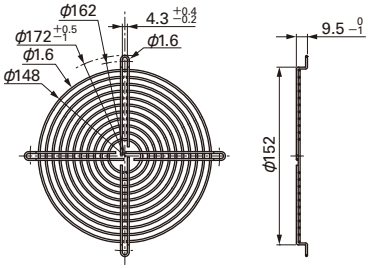

Model : 109-320 Surface treatment : Nickel-chrome plating (silver) Color

Outlet side

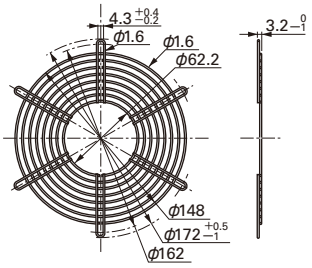

Model : 109-1068 Surface treatment : Nickel-chrome plating (silver) Color

Outlet side

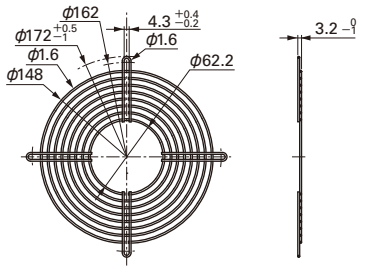

Plug cord

(Products compliant with Electrical Appliance and Material Safety Law)
Model : 489-1619-L10/489-1619-L21

L-shaped

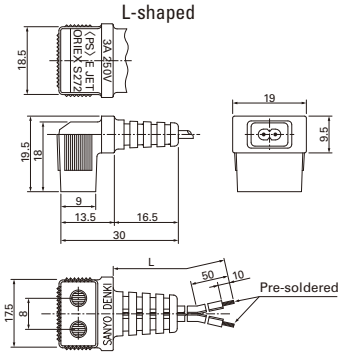

(UL/CSA CERTIFIED)
UL FILE No.E50197 CSA FILE No.LR67048
Model No. : 489-084-L10/489-084-L21

L-shaped

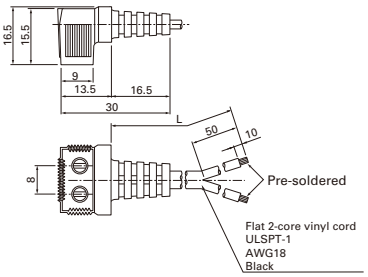

Model	Power cord length(mm)
— L10	1,000
— L21	2,100

Air Flow - Static Pressure Characteristics

Standard

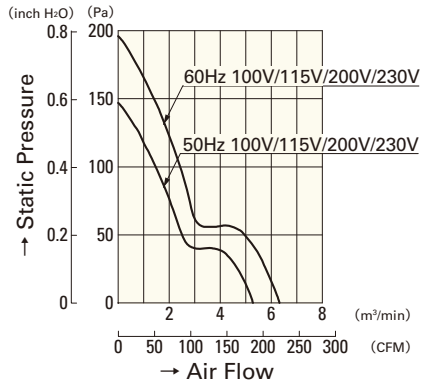

109-311	109-314
109-312	109-313

with Sensor

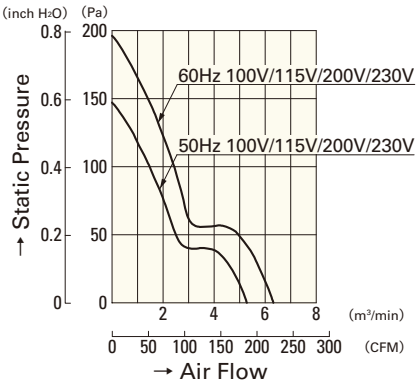

109-371	109-374
109-372	109-373

Cooling Fan Units

Features

We provide assembled fan units in accordance with the specification or requirements of the equipment.
For use in communications equipment, servers, storage systems.

■Example

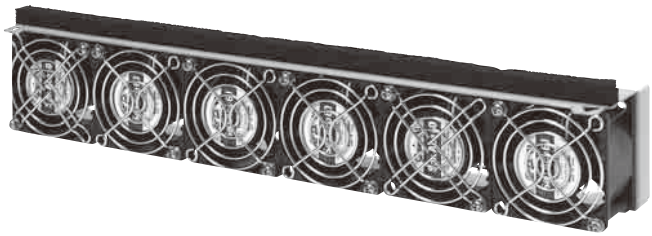

Electrolytic Corrosion Proof Fans

Technical Material
Refer to page 48

Features

This cooling fan prevents electrolytic corrosion of bearings even under conditions where electromagnetic noise is generated.
Electrolytic corrosion of ball bearings is prevented by using ceramic balls in ball bearings. The ceramic material is an insulating material.
Manufacturable to meet specifications of all San Ace series fans.

■Structure

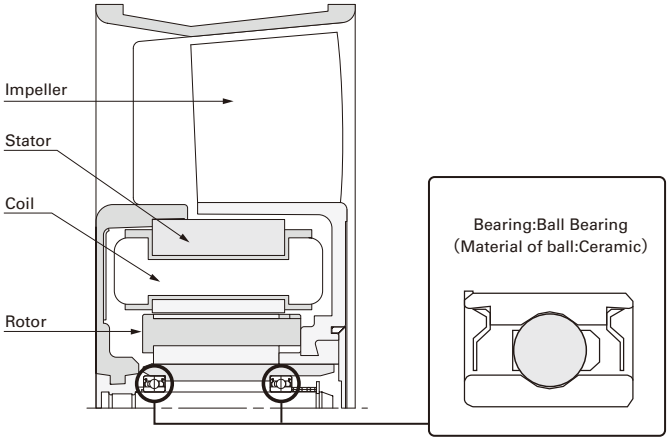

Caution

Electrolytic Corrosion Proof Fan has been designed to prevent the electrolytic corrosion of ball bearings in the fan, but this does not guarantee that the fan will operate normally under conditions where there is strong electromagnetic noise.
Please be sure to fully evaluate the value of fan malfunction due to noise in advance.

Finger guards

Dimensions(Unit : mm)

60mm sq. type

Model : 109-139E Surface treatment : Nickel-chrome plating Color (silver)
: 109-139H : Cation electropainting (black)

Inlet side, Outlet side

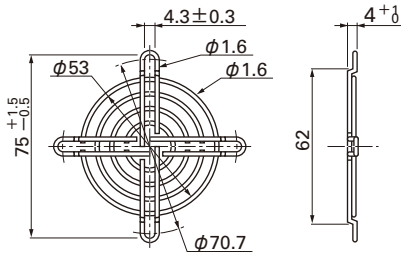

80mm sq. type

Model : 109-049C Surface treatment : Nickel-chrome plating Color (silver)

Outlet side

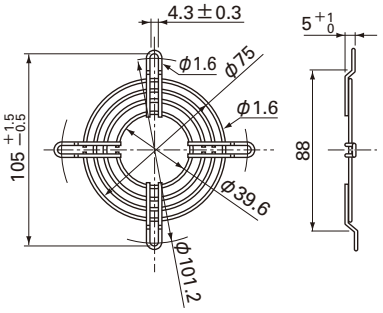

80mm sq. type

Model : 109-049E Surface treatment : Nickel-chrome plating Color (silver)
: 109-049H : Cation electropainting (black)

Inlet side, Outlet side

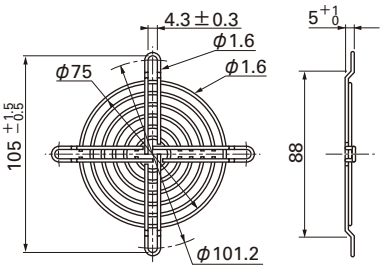

92mm sq. type

Model : 109-099C Surface treatment : Nickel-chrome plating Color (silver)

Outlet side

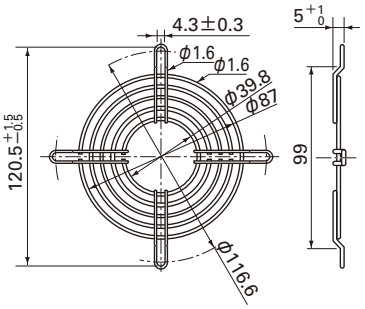

92mm sq. type

Model : 109-099E Surface treatment : Nickel-chrome plating Color (silver)
: 109-099H : Cation electropainting (black)

Inlet side, Outlet side

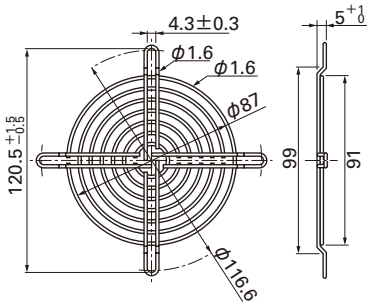

120mm sq. type

Model : 109-019C Surface treatment : Nickel-chrome plating Color (silver)
: 109-019H : Cation electropainting (black)

Outlet side

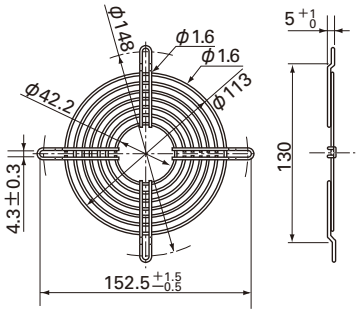

120mm sq. type

Model : 109-019E Surface treatment : Nickel-chrome plating Color (silver)
: 109-019K : Cation electropainting (black)

Inlet side, Outlet side

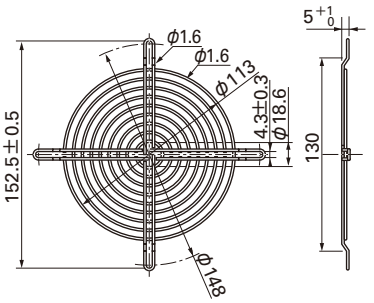

160mm sq. type

Model : 109-619E Surface treatment : Nickel-chrome plating Color (silver)

Inlet side, Outlet side

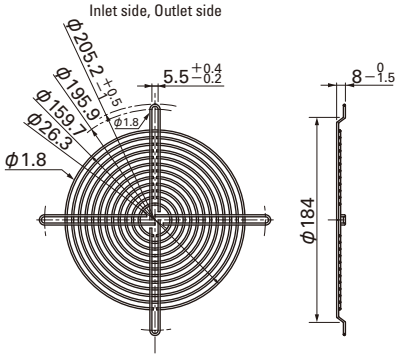

Finger guards

Dimensions(Unit : mm)

160mm sq. type

Model : 109-620 Surface treatment : Nickel-chrome plating Color (silver)

Outlet side

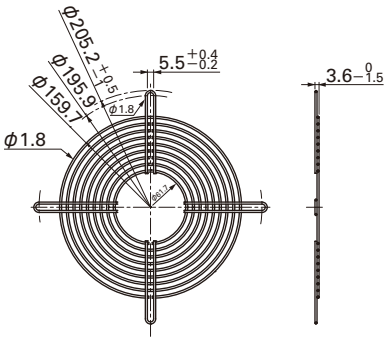

φ172mm type

Model : 109-319E Surface treatment : Nickel-chrome plating Color (silver)
: 109-319H : Cation electropainting (black)

Inlet side, Outlet side

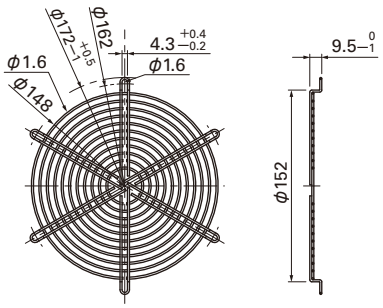

φ172mm type

Model : 109-320 Surface treatment : Nickel-chrome plating Color (silver)

Outlet side

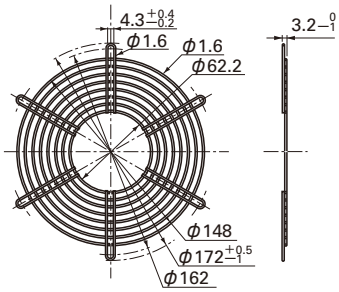

φ172mm Round type

Model : 109-1066 Surface treatment : Nickel-chrome plating Color (silver)

Inlet side, Outlet side

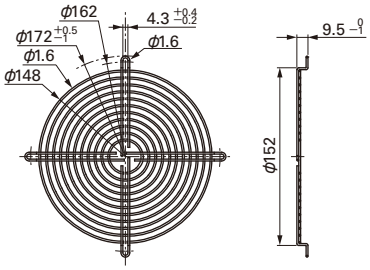

φ172mm Round type

Model : 109-1068 Surface treatment : Nickel-chrome plating Color (silver)

Outlet side

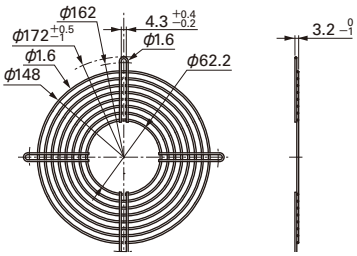

Reference Diagram For Mounting

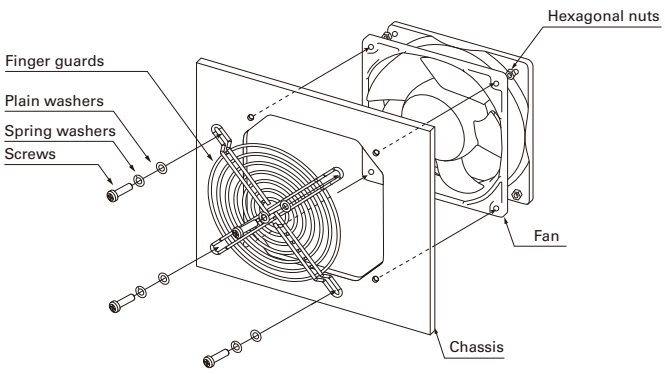

Resin finger guards

Dimensions(Unit : mm)

60mm sq. type Model : 109-1003G

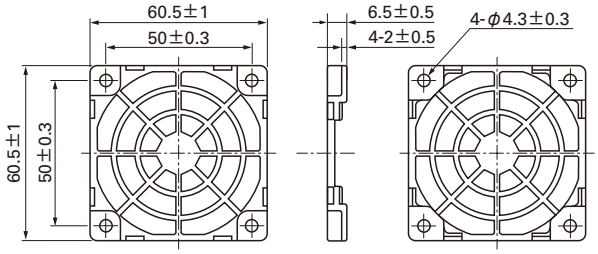

80mm sq. type Model : 109-1002G

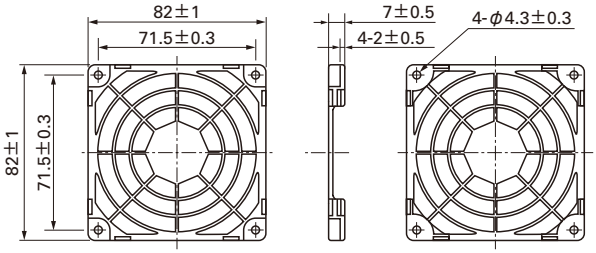

92mm sq. type Model : 109-1001G

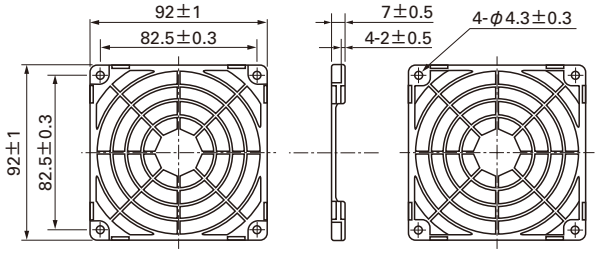

120mm sq. type Model : 109-1000G

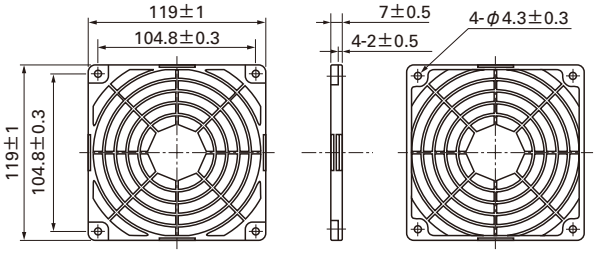

Material Frame : Resin (SPS+PS alloy) UL File No.E48268 94V−0

Air Flow and Static Pressure Characteristics

Measured using Sanyo airflow chamber
(120mm sq. type)

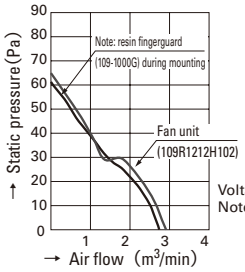

Voltage: DC12V
Note: Filter kit is attached on air inlet side of fan

Mounting example

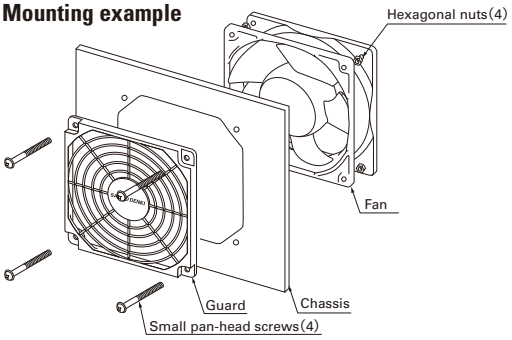

Plastic finger guards are placed on both the intake and exhaust sides of the fan.
No nuts or screws for use in attachment included.

Filter kits

Applicable models : AC Fan 120×120×38mm

Neither filter kit nor screen kit can be installed on fans with sensor.
Please evaluate it by assembly filter kits on the derice.

Dimensions(Unit : mm)

Model : 109-018

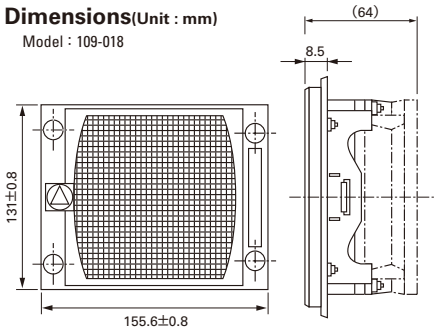

Material
Steel Wire Mesh : Stainless 16-mesh nets in 3 layers
Cover : Resin
Metal fittings : Steel (chromate-plated)

Air Flow and Static Pressure characteristics

(by SANYO airflow chamber)

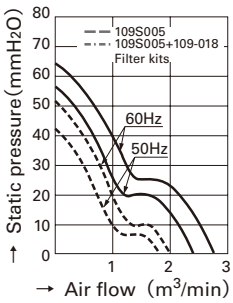

Reference Dimensions Of Mounting Holes (Unit : mm)

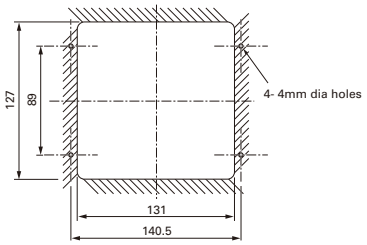

Reference Diagram For Mounting

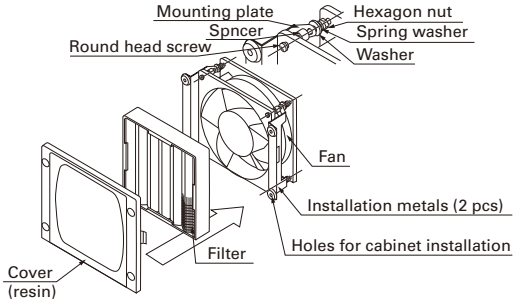

The parts shown in the installation diagram (nuts, washers, and screws) are included.

Resin filter kits

Dimensions(Unit : mm)

60mm sq. type

Model : 109-1003F13 (13PPI) 109-1003F20 (20PPI)
: 109-1003F30 (30PPI) 109-1003F40 (40PPI)

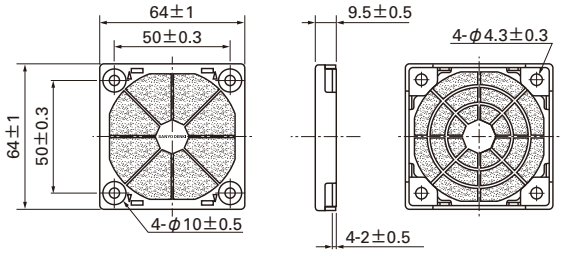

80mm sq. type

Model : 109-1002F13 (13PPI) 109-1002F20 (20PPI)
: 109-1002F30 (30PPI) 109-1002F40 (40PPI)

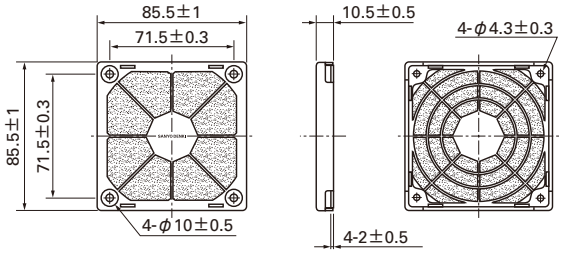

92mm sq. type

Model : 109-1001F13 (13PPI) 109-1001F20 (20PPI)
: 109-1001F30 (30PPI) 109-1001F40 (40PPI)

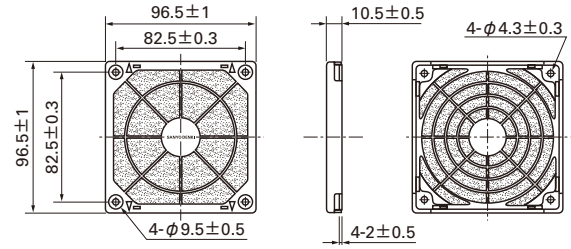

120mm sq. type

Model : 109-1000F13 (13PPI) 109-1000F20 (20PPI)
: 109-1000F30 (30PPI) 109-1000F40 (40PPI)

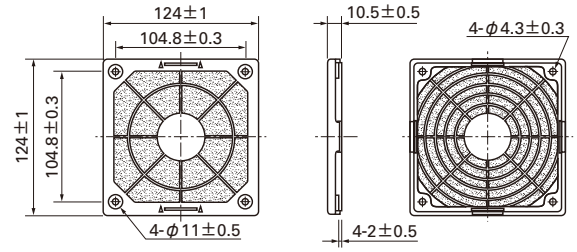

Material Guard,cover : Resin (SPS+PS alloy) UL File No.E48268 94V−0
Filter : Polyurethane foam UL File No.E74916(S) 94HF−1

PPI Particles Per Inch : Indicates the number of holes per inch. Note that the higher the number, the finer the grain of the sponge.

Air Flow and Static Pressure Characteristics

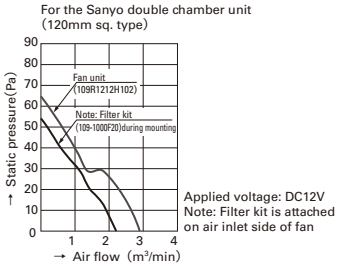

Applied voltage: DC12V
Note: Filter kit is attached on air inlet side of fan

Mounting example

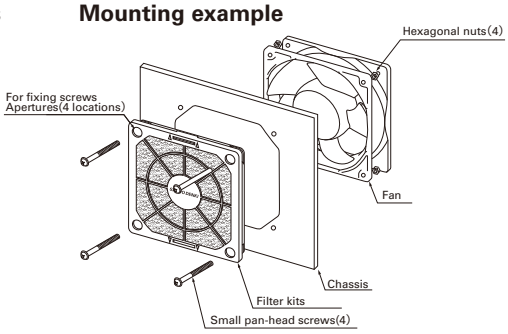

Replacement filter (5 sheets each)

60mm sq. type	80mm sq. type
109-1003M13 (13PPI)	109-1002M13 (13PPI)
109-1003M20 (20PPI)	109-1002M20 (20PPI)
109-1003M30 (30PPI)	109-1002M30 (30PPI)
109-1003M40 (40PPI)	109-1002M40 (40PPI)

92mm sq. type	120mm sq. type
109-1001M13 (13PPI)	109-1000M13 (13PPI)
109-1001M20 (20PPI)	109-1000M20 (20PPI)
109-1001M30 (30PPI)	109-1000M30 (30PPI)
109-1001M40 (40PPI)	109-1000M40 (40PPI)

● Filter kit is one of the option to keep air in the chassis clean filtering dust in external atmosphere when pulling-air cooling is implemented. The filter kit is hooked up through mounting hole of fan frame with screw as well as finger guard. Some performances(airflow & static pressure) of the fan motor decreases when filter kit is hooked up.●This Filter Kit is composed of 3 components, including a guard, a filter and a cover. It is delivered as a finished product at delivery, saving assembly time when mounting. It can be mounted by inserting a screw in the apertures of the cover.●The filter and cover can be easily removed from the guard with one touch. There is no need for fan removal when undertaking maintenance.●Operating temperature limit is between −10℃ to +60℃ .(non condensing)●The filter will deteriorate with age, and the level of deterioration will vary upon usage conditions. Please be aware that the filter has a greater tendency to deteriorate under high temperature and humidity.For long-term storage, please store under the temperature range of 10℃ to 30℃ , humidity range of 20% to 65%. Usage and storage period is approximately 2 years.●Cooling ability decreases with filter contamination due to clogging. Filter replacement is recommended approximately every six months of usage. Please replace the filter if deterioration or clogging is seen at inspection.●When replacing the filter, please use genuine SANYO DENKI filters.●Do not water-wash the filter.●Avoid use and storage under high temperature or humidity, direct sunlight or exposure to ultraviolet light, or in corrosive gas.●No nuts or screws for use in attachment included.

Screen kits

Applicable models : AC Fan 120×120×38mm

Neither filterkit nor screenkit can be installed on fans with sensor.

Dimensions(Unit : mm)

Model : 109-020

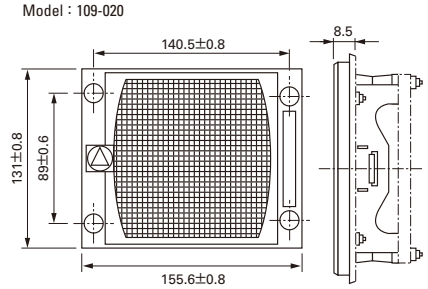

Material
Steel Wire Mesh : Stainless 16-mesh nets in 1 layers
Cover : Resin
Metal fittings : Steel (chromate-plated)

Air Flow and Static Pressure characteristics (by SANYO airflow chamber)

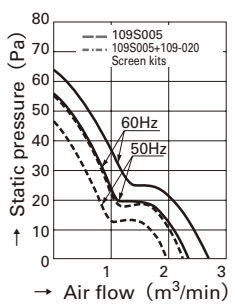

Reference Dimensions Of Mounting Holes (Unit : mm)

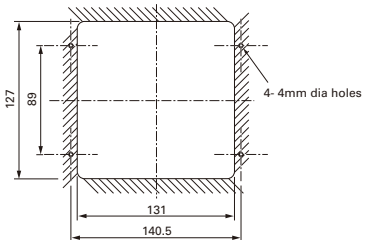

Reference Diagram For Mounting

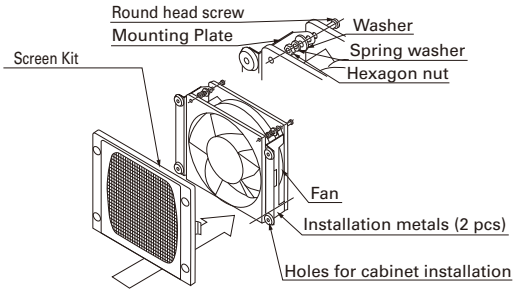

The parts shown in the installation diagram (nuts, washers, and screws) are included.

Plug cord

Products compliant with Electrical Appliance and Material Safety Law(Unit : mm)

Model No. : 489-008-L10/489-008-L21/489-008-L35

For 80×80×42mm

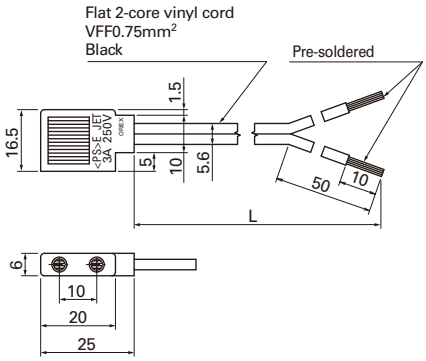

Model No. : 489-016-L10/489-016-L21

For 120×120×25mm
92×92×25mm
80×80×25mm
80×80×38mm

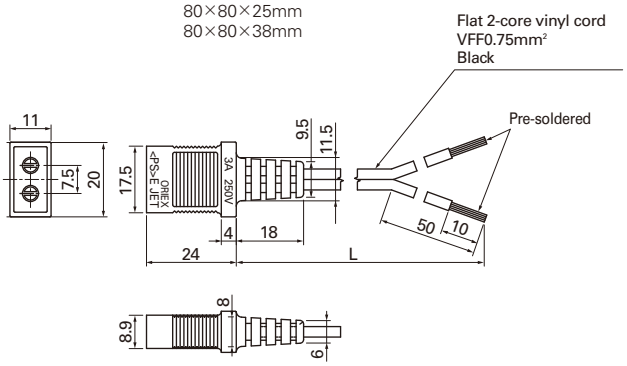

Model No. : 489-006-L10/489-006-L21/489-006-L35

For 120×120×38mm

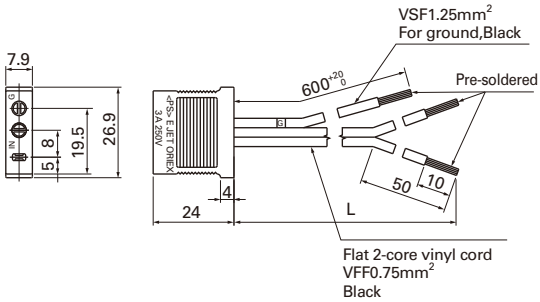

Model No. : 489-037-L10/489-037-L21/489-037-L35

For 120×120×38mm

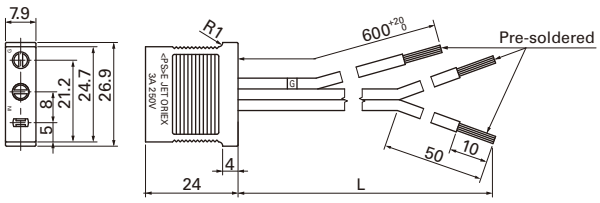

Model No. : 489-1618-L10/489-1618-L21/489-1618-L28

straight
160×160×51mm

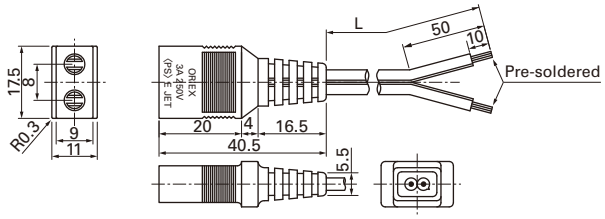

Model No. : 489-1619-L10/489-1619-L21

L-shaped
Φ172mm×51mm
Φ172×150×51mm
160×160×51mm

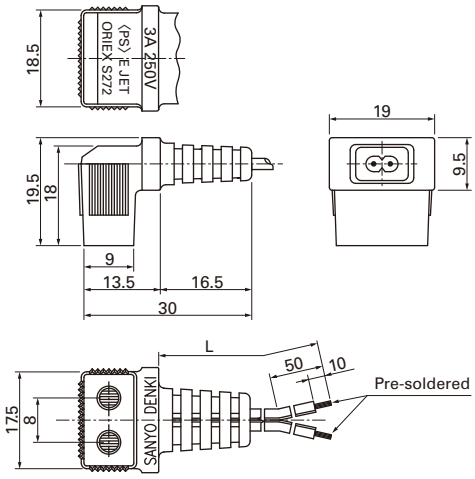

Power cord length

Model	Power cord length(mm)
— L10	1,000
— L21	2,100
— L28	2,800
— L35	3,500

●Be careful when removing the plug/cord out of the package.

UL/CSA CERTIFIED(Unit : mm)

Model No. : 489-007-L10/489-007-L21

UL FILE No.E50197 CSA FILE No.LR67048
For 120×120×38mm

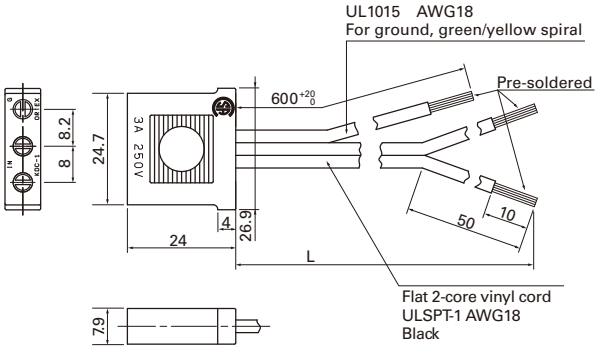

Model No. : 489-047-L10/489-047-L21

UL FILE No.E50197 CSA FILE No.LR67048
For 120×120×25mm
92×92×25mm
80×80×25mm
80×80×38mm

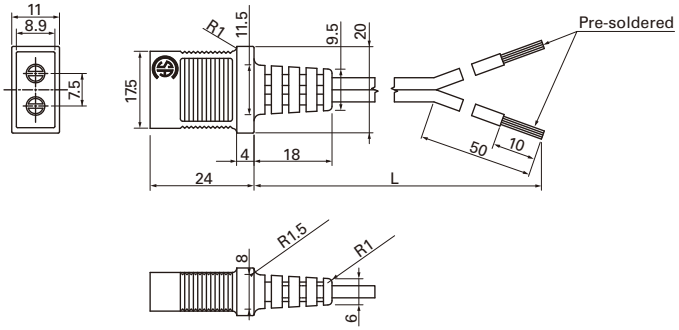

Model No. : 489-084-L10/489-084-L21

UL FILE No.E50197 CSA FILE No.LR67048
L-shaped
For φ172mm×51mm
φ172×150×51mm
160×160×51mm

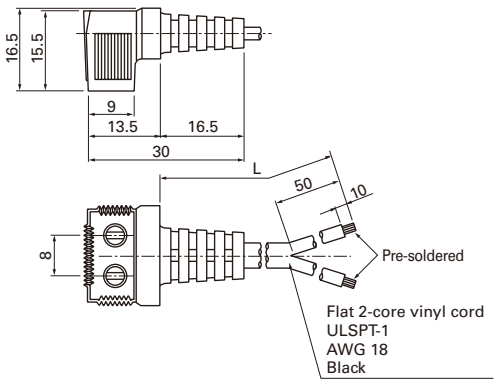

Model No. : 489-086-L10/489-086-L21

UL FILE No.E50197 CSA FILE No.LR67048
straight
For 160×160×51mm

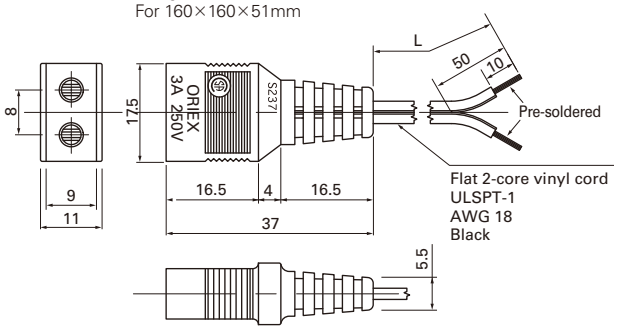

Power cord length

Model	Power cord length(mm)
— L10	1,000
— L21	2,100

●Be careful when removing the plug/cord out of the package.

Overview and characteristics of fan

Overview

A cooling fan is widely used to extend life of your system by cooling off heat of the system that many electrical components are mounted in a very high density and dissipating heat. Since we Sanyo Denki developed "San Ace" which is the first AC fan in Japan in 1965, we have increased fan motor lineup until now meeting customer' s needs rapidly based on our tremendous career. We Sanyo Denki will continue to develop new fans with high air flow, low noise, low vibration, and energy - saving design.

Characteristics

We can roughly devide fan into two types which are AC and DC.

AC Fans

Sanyo Denki succeeded in the mass-production of AC fans in 1965. Sanyo Denki was the first Japanese manufacturer to have succeeded at this.

- ●High performance
- ●High reliability
- ●Safety

DC Fans

Sanyo Denki succeeded in the mass-production of DC fans in 1982.

- ●High performance
- ●Low power consumption
- ●Low vibration
- ●Low leakage of flux
- ●High reliability

Sanyo Denki currently has a wider variety of products like Long Life Fan, CPU cooler, Splash Proof Fan, and Oil Proof Fan etc to meet all customer needs.

Guideline in selecting a fan

How to select an appropriate fan

The following example is a guideline regarding how to select an appropriate fan for cooling your system

1. Determining of your system specifications and conditions

Determine the temperature rise inside your system and obtain the total heating value inside your system on the basis of its inputs and outputs.

Example

V : Total heating value of your system (W) =100 (W)

△T : Inside temperature rise (K) =15 (K)

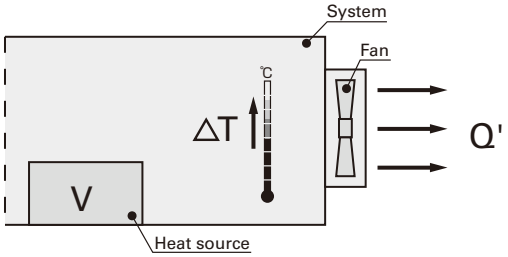

2. Calculating the Required Air flow for Cooling

After the equipment specifications and conditions of your system have been determined, calculate required air flow to meet the conditions.(Note that the formula shown below only applies when the heat radiation is performed only by cooling air from the fan.)

Example

Q': Motion air flow (m^3/min)

$$Q' = \frac{V}{20\triangle T} = \frac{100\ (W)}{20\times 15\ (K)} \fallingdotseq 0.33\ (m^3/min)$$

3. Selecting the Fan

After the motion air flow has been calculated, select an appropriate fan motor based on the value.The motion air flow when the fan motor is actually mounted in your system can be obtained using the air flow-static pressure characteristics curve and system impedance.However, the system impedance cannot be measured without a measuring equipment, so fan with 1.5 to 2 times higher air flow than the actual maximum air flow should be selected (operating air flow is one-third to two-thirds of maximum air flow).

Example

Q: Maximum air flow (m^3/min)

$Q' = Q\times 2/3$

$Q = Q' \times 3/2 = 0.33\times 3/2 \fallingdotseq 0.5\ (m^3/min)$

Next, In case that you select a fan having an air flow of 0.5 (m^3/min.) or more and a appropriate size for the space inside your system.

For example, If you need a fan of 80mm square, 25mm thickness and 100V, you should select is 109S030 (maximum air flow = 0.55^3/min.).

Characteristics of air flow versus static pressure and those of pressure losses of equipment

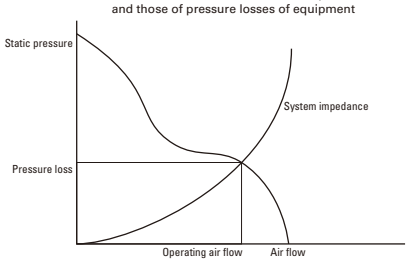

4. Confirming the Selected Fan

Calculate the temperature rise inside your sysetem when your sysetem having 100 (W) of total heating value is forcefully cooled down by a 109S030 fan.

Example

$Q' = Q\times 2/3 = 0.53\times 2/3 \fallingdotseq 0.367\ (m^3/min)$

$\triangle T = V/20Q' = 100\ (W)\ /20\times 0.367\ (m^3/min) \fallingdotseq 13.6\ (K)$

From the above, the temperature rise inside your system is calculated as 13.6 (K) .

Since the value obtained from the above equation is only a rough target, final fan selection should be based on your actual installation test.

Characteristics calculation method and description

Reliability and Expected Life

A fan generally cools itself as well. The temperature rise of the motor is relatively low and the temperature rise of the grease in the bearings is also low, so expected life is longer than general some either motors. Since the service life of bearings is a theoretical value that applies when they are ideally lubricated, the life of lubricant can be regarded as expected life of the fan. The expected life of an AC fan used at an ambient temperature 60℃ is 25,000 hours. When the measurement conditions are: L10 (the remaining product life in the lifespan test is 90%), with an atmospheric temperature of 60 degrees, at the rated voltage and with continuous free air. The right table indicates the relationship between ambient temperature and expected life estimated on the basis of our life tests and same other tests conducted by Sanyo Denki. An accelerated life test is conducted on the basis of the concept that the expected life halves as the ambient temperature rises by about 15℃ (within the operating temperature range of lubricant.)

Expected life of AC Fans

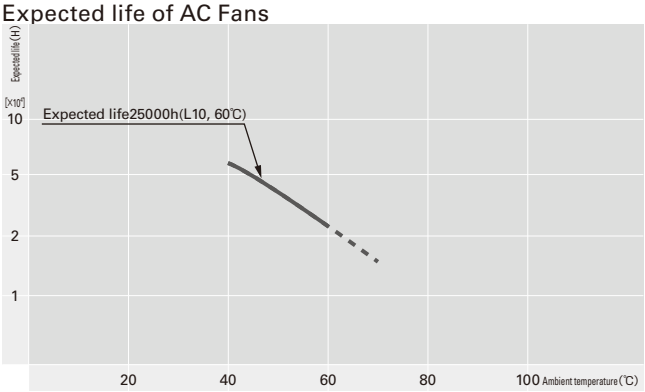

Rated voltage, continuously run in a free air state, survival rate of 90%

Noise characteristics

Noise is average value that measured at 1 meter away from air intake side of fan that is suspended on special frame in anechoic chamber (as per JIS B 8330).

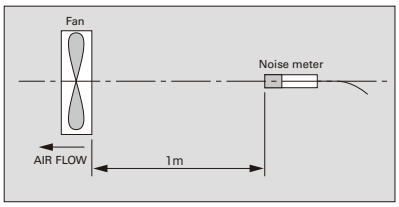

Acoustic radio wave anechoic chamber

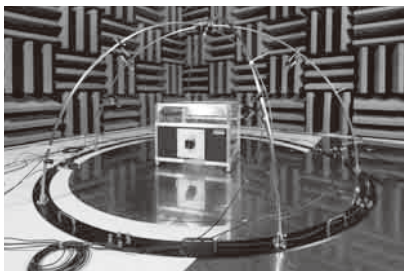

Noise characteristic measurement equipment

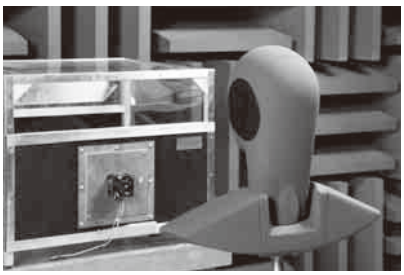

Measuring air flow and static pressure

It is very difficult to measure air flow and static pressure. In fact, the performance curve may vary greatly according to the type of measuring equiment.
The commonly-used type of measuring equipment is a wind tunnel using a Pitot tube. Sanyo Denki uses a very precise method using double chamber equipped with many nozzles.

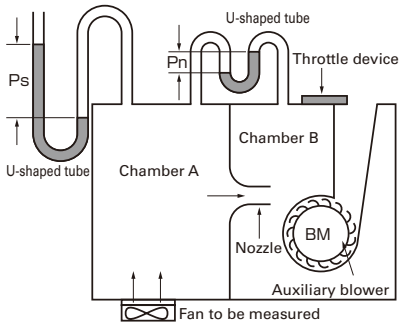

Double chamber measuring equipment

$Q = 60A\bar{v}$ (A)

where

Q = air flow (m^3/min)

A = cross sectional area of nozzle $= \frac{\pi}{4}D^2$ (m^2)

D = nozzle diameter

$\bar{v}$ = average air flow velocity of nozzle $= \sqrt{2g\frac{Pn}{\gamma}}$ (m/sec)

γ : Air specific gravity (kg/m^3)
(γ=1.2kg/m^3 at 20℃ , 1 atmospheric pressure)

g = acceleration of gravity = 9.8 (m/sec^2)

Pn= differential pressure (mm H_2O)

Ps= static pressure (mm H_2O)

The measuring equipment using double chanber is method to be calculated from air flow goes through nozzle and differential pressure between pressure of inside of chamber (Ps) and atomospheric pressure by measuring differetial pressure between air intake and exhaust of nozzle (Pn).

Conversion Table

Static pressure

1mm H_2O=0.0394inch H_2O
1mm H_2O=9.8Pa (Pascal)
1inch H_2O=25.4mm H_2O
1Pa=0.102mm H_2O
1inch H_2O=249Pa

Air flow

1m^3/min=35.31ft^3/min (CFM)
1CFM=0.0283m^3/min
1m^3/min=16.67ℓ /sec
1CFM=0.472ℓ /sec
1ℓ /sec=0.06m^3/min

AC Fan Common Specifications

Material ····· Frame:Aluminum,Impeller:Plastics

Expected Life ····· Varies for each model
(L10:Survival rate:90% at 60℃ ,rated voltage,and continuously run in a free air state)

Motor Construction ····· Shaded coil motor (60mm sq. 80mm sq. 92mm sq. 120mm sq.)
Capacitor motor (160mm sq. Φ172mm)

Motor Protection System ·· Burnout protection at locked rotor condition

Dielectric Strength ····· 50/60Hz 1500VAC 1minute
(between input terminal and frame or between lead conductor and frame *For details, refer to the appropriate page.)

Insulation Resistance ····· 10MΩ or more at 500VDC megger (between lead conductor and frame)

Sound Pressure Level(SPL) ·· Expressed as the value at 1m from air inlet side

Operating Voltage Range ·· ±10%

Storage Temperature ····· -30℃ to +70℃ (Non-condensing)

Lead Wire ····· For details, refer to the appropriate page.

Overheating protection function

Protection Functions

If the fan blades are restricted, an overcurrent occurs and leads to a rise in the fan coil temperature. This can result in reduced performance, damage, or a fire. To prevent this from occurring, Sanyo Denki' s fans incorporate an overheating protection function.

Burnout protection function at locked rotor condition

●Impedance protection (60mm sq. 80mm sq. 92mm sq. 120mm sq.)

This system is used for shading coil-type fans. When the blades are restricted, the current is reduced by the impedance of the coil itself to prevent a temperature rise in the coil. However, if the applied voltage exceeds the specification range, an overcurrent can occur and result in overheating, and so care needs to be taken.

●Thermal protection (160mm sq. φ172mm)

This system is used for condenser phase-type fans. A temperature sensor is incorporated in the coil so that if the temperature exceeds the specification temperature, the current is cut off to prevent overheating of the coil.

Specifications for AC fan sensor

Specifications of sensor circuit

	5V (ITEM-20*)	12V (ITEM-30*)
Example of model.no	109S405UL	
System	Speed detection, Auto-restart, Open collector	
Power supply	DC5V±10% At 5V, 6mA	DC12V±20% At 12V, 10mA
Recommend sensor circuit output	At Vp=5V, I=100mA max.	At Vp=12V, I=200mA max.
Trip point	Standard speed : 1,700min^{-1}±10% Low speed : 850min^{-1}±10%	
Response speed	Standard speed : Startup delay 18sec Detection delay 1sec Low speed : Startup delay 36sec Detection delay 2sec	
Insulation resistance	10 MΩ MIN. at a 500V DC megger (Note)	
Dielectric strength	50/60 Hz, 1,000V AC, 1 minute (Note)	
Ambient conditions	Temperature: −10 to +60℃ , humidity: 90%RH MAX. (at 40℃)	

Nameplate

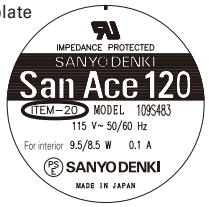

*[ITEM-20] and [ITEM-30] are printed on the fan nameplate.

Note: Between one end that all sensor leads consisting of brown, yellow and black are tied together and the G terminal or power terminal of the fan.

Sensor scheme

Example 1: When the AC power for the fan and the DC power for the sensor are turned on at the same time

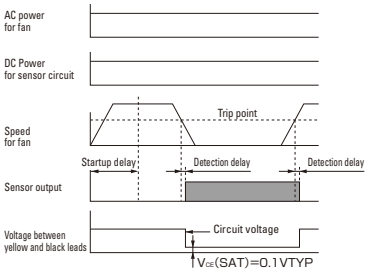

Example 2: When the AC power for the fan is turned on first, then the DC power for sensor is powered on

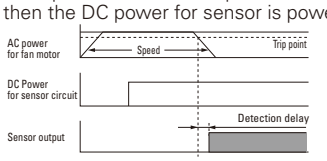

Example 3: When the DC power for sensor is first powered on, then the AC power for the fan is turned on

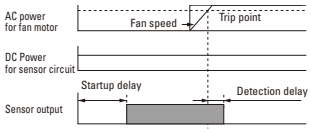

Sensor Output Circuit

5V (ITEM-20*)

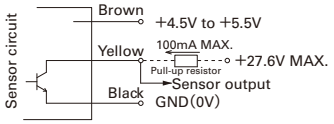

12V (ITEM-30*)

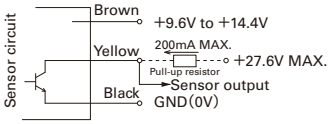

GND (Black) should be shared in case that power supply for sensor circuit (Brown) and that for sensor pull-up (Yellow) are separated.

UPS, inverter, rectifier, high-voltage power supply, etc.

Cautions for use of a cooling fan in the vicinity of a power switching circuit (prevention of electrolytic corrosion)

Custom Product Refer to page 38

If a fan is installed near a large-power or high-voltage switching circuit, the heavy electromagnetic noise resulting from electromagnetic induction in such circuits or the influence of high-frequency noise imposed through the power line of the fan may induce current through the shaft bearing of the fan.Such current may damage the oil film on the bearing and even the friction surface of the bearing.This adverse effect is known as "electrolytic corrosion of the fan."Electrolytic corrosion affects the smooth revolution of the fan and may reduce its service life. An audible symptom is unusual noise emitted from the fan.This adverse effect is often observed and may partly be explained by the practice of mounting high-density parts, which reduces the gap between the switching circuits and the fan and the use of higher switching frequencies apt to provoke induction. Data processing/communications devices that operate at low voltages are not liable to electrolytic corrosion since they generate less electromagnetic noise.

A Case of Electrolytic Corrosion

Fans without anti-corrosion features installed near components that generate electromagnetic noise, such as inverter controllers, are liable to experience electrolytic corrosion.

No.	Use	Period until the occurrence of unusual noise
1	Switching power supply	6 months to 2 years
2	UPS	6 months to 2 years
3	General-purpose inverter	1 to 1.5 years

The curve shown in the graph below represents the relationship between the level of the electromagnetic noise induced by a fan and the distance from the fan to the noise source.

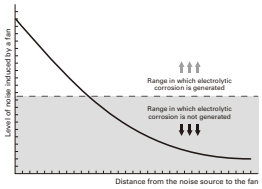

Occurrence of electrolytic corrosion Pattern 1

(1)The fan gets charged with high-frequency electricity by high-frequency noise (electric field/magnetic field) generated in the switching circuit.
(2)Because of high-frequency electricity charged in the fan, an electric current flows through the bearing of the fan.
(3)The electric current breaks the oil membrane on the surface of the bearing and the bearing gets abraded (electrolytically corroded).
(4)This symptom often occurs in equipment in which switching circuits are sped up and implemented in high density.
(5)Countermeasure 1: To provide a shield plate (Note 1) inside the fan (The plate should be such that does not interfere with air flow.)
(6)Countermeasure 2: To use a fan with ceramic bearings.

Occurrence of electrolytic corrosion Pattern 2

(1)High-frequency electricity flows from the circuit board into the inside of the fan superimposed with the power line for the fan.
(2)High-frequency electricity that has entered into the fan flows through the bearing.
(3)Oil membrane on the surface of the bearing gets broken and the bearing gets abraded (electrolytically corroded).
(4)Countermeasure 1: To remove high-frequency component between terminals "a" and "b", "a" and "e" and "b" and "e" of the power supply for the fan, or to insert a filter (Note 2) into the power line for the fan.
(5)Countermeasure 2: To use a fan with ceramic bearings
(6)Cables should be twisted in order to decrease induction to the power line for the fan.

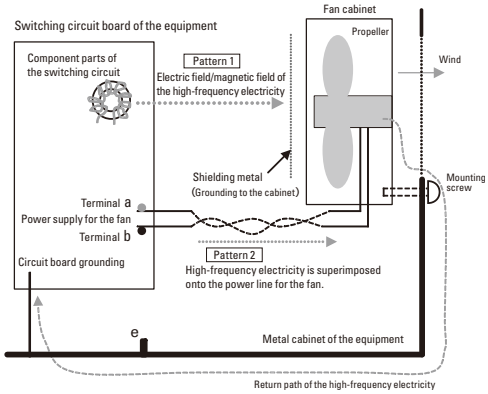

Note 1 : Shielding metal plate
As an electromagnetic shield metal, "EMC Guard" is available from our company.
http://www.sanyodenki.co.jp/products/sanace/fanden.html
Certain shielding effect can be expected from mounting a general-purpose finger guard inside the fan.In each case, grounding to the cabinet is required.
Note2 : Filter
Insert a common mode filter when the high-frequency electricity is superimposed on both lines "a" and "b" in the same phase and, if not, insert a normal mode filter.

Measures against Electrolytic Corrosion

(1) Relocate fans far from all electromagnetic noise sources.
(2) Use anti-corrosion fans equipped with ceramic bearings. ⇨ Refer to page 38
(3) As a power supply, the fan is wired from a circuit for which noise is not superimposed.

*The EMC guard could be effective against electromagnetic noise caused by radiation, but against heavy electromagnetic noise (electromagnetic induction) and conductive noise from the power supply line for a fan, we recommend the use of an "anti-electrolytic corrosion fan" with ceramic bearing.

Operating precautions

Operating precautions

Storage temperature

There is no performance problem when the system is used at between -30℃ and +70℃ . There is a possibility that same problem of lubricant and insulation inside motor might occur by condensing due to rapid surrounding temperature change. Therefore, please take care of non-condensing using desiccant or something during fan is in storage.

Tightening Torque

This shows the recommended values for the tightening torque when installing the fans. If the tightening torque is higher than the recommended values, the fan can be deformed or damaged. Use care when tightening.
Recommended screw torques
Fans : 0.44N · m (4.5kgf · cm) MAX. (with M3 screws)
Fans : 0.78N · m (8kgf · cm) MAX. (with M4 screws)
(160mm×160mm、φ172mm)

Handling precautions

The fan motor is equipped with a precision ball bearing. Therefore, please handle the motors carefully in order not to shock the bearings.

Installation

There are no limitations on the installation direction. Fans have symbols on the fan indicating the airflow direction and blade rotation direction. When installing, use these symbols to check the airflow direction.

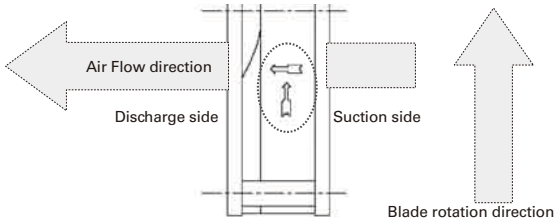

Symbols indicating the fan airflow direction and blade rotation direction

Safety Precautions

- In order to ensure that this product is used safely, be sure that you read and understand the following precautions fully and use the product only as directed.
- Be sure to read these Safety Precautions carefully before installing, connecting, operating, maintaining, or inspecting this product. Follow all the precautions and directions given here.
- This product has been designed and manufactured for use as a device to be used in general industrial machinery, and may not be used as a standalone product.
- The product of our company (hereafter called the product) falls into the category of the products specified in the Attached List 1, Item 16 (Class 84, Item 14) of the Export Trade Control Ordinance. To export the product as an individual part or to export a product into which the product is assembled, the "Information Requirements" and "Objective Requirements" that the Ministry of Economy, Trade and Industry established based on the "Catchall Controls" must be studied for applicability. Based on information on applicability and specified requirements, appropriate export formalities must be performed.
- Dispose of the product as industrial waste. Please contact your local government office for further details about disposal.

In order to prevent any possible bodily injury or damage to property or equipment, the following precautions for ensuring safety are displayed according to the following two ranks of importance:

Danger	Handling or using the product improperly and in disregard of the instructions with this mark might result in serious bodily injury or death.
Warning	Handling or using the product improperly and in disregard of the instructions with this mark might result in bodily injury or physical damage.

※ Note: Items marked 'Warning' might also result in serious bodily injury or death in some circumstances. Always follow the instructions for items marked 'Danger'.

Descriptions of the precautions to be taken to ensure safety are given below.

Danger

- If the product is used in medical appliances or other types of equipment that affect people's lives, sufficient safety-related evaluations and preparations must be made in advance, and the product or the type of equipment into which the product is assembled must be used on the user's own responsibility.
- If the product is used in types of equipment that have a strong social and public impact, sufficient prior evaluations and safety-related evaluations and preparations must be made, and the product or the type of equipment into which the product is assembled must be used on the user's own responsibility.
- If the product is used in an environment where there are vibrations, for example, in a car or aboard a ship, sufficient prior evaluations and safety-related evaluations and preparations must be made, and the product or the piece of equipment into which the product is assembled must be used on the user's own responsibility.
- Connect all wires properly and securely. Failure to do so might result in burns, fire, or exposure to electrical shock.
- If there are any grounding taps or wires, attach all grounds securely. Failure to do so might result in exposure to electrical shock.
- Never use in explosive atmosphere, as doing so might result in fires, burns, or bodily injury.
- Never operate with any live wires exposed, as doing so might result in electrical shock.
- Never allow any persons or objects to approach or come into contact with the rotor while in operation, as doing so might result in damage or personal injury.
- Turn off the power and stop using the product immediately if you notice any sparks, smoke, odd odors, sounds, or anything unusual during operation. Failure to do so might result in fire, burns, or electrical shock.
- Never allow the product to fall, topple over, or otherwise be subjected to excessive shocks when moving it, as doing so might result in product breakdown or substandard operation.
- The product should be handled only by personnel with sufficient training and knowledge and under the responsibility of the end user.
- Never attempt to disassemble, repair, or alter this product in any way, as doing so might result in fire, burns, or electrical shock.

Warning

Handling

- Installation, placement, connections, wiring, or relocation of the product should be performed by knowledgeable or correctly licensed personnel. Never perform such work while the product is live as this might lead to injury, electrical shock, burns, or fire.
- Do not use the fan if not fixed or stand in hand.
- Never allow yourself to come into contact with the ends of wires or plugs when measuring the insulation resistance or dielectric strength voltage. This might result in electrical shock.
- Never attempt to disassemble or alter this product in any way. Doing so might invalidate any warranties concerning the functions or performance of the product, and might also result in fire, burns, bodily injury, or electrical shock.

Instruction

- If the fan stops during operation, give proper consideration to the device for its protection.
- Never use the product at voltages, temperatures, or any other settings which exceed those given in the product specifications. This might result in substandard operation, breakdown, fire, bodily injury, or electrical shock.
- The fan may fail to operate properly if there is insufficient power capacity, because the starting current is several times larger than the rated current will flow at the moment of the voltage is supplied to the fan. Be sure to inquire about startup current levels for individual models.
- Do not control the speed of the fan by changing power voltage. It may cause fan failure.
- Start up all fans at the same possible timing if two or more fans which wind interferes with each other are installed in the device.
  If the fan is exposed to wind from other fans at start up, it may cause fan failure or the fan may not start up correctly.
- Never insert or remove any plug cords or connectors while the power is turned on. When inserting or removing plugs or connections, always be sure to first check that the power has been turned off and hold the housing of the plug or connector when doing so. Failure to do so might result in damage or exposure to electrical shock.
- Never remove the product identification plate or install the product so that the identification cannot be seen after installation. This could result in the product being improperly used, and subsequently result in fires.
- The product might become damaged if foreign objects or external forces are allowed to interfere with normal fan operation.
- Do not implement ON-OFF of power supply in negative line. That might cause damage of the fan.

Installation

- When fixing this product into place, be sure to take into consideration the product's weight, the vibrations generated during operation, and all other relevant factors. Failure to do so might cause the product or parts of it to fall out of position, resulting in bodily injury or malfunction of the product.
- Be sure to check the direction of installation (i.e., the fan), as failing to do so might result in bodily injury or mechanical breakdown.
- In order to ensure that the product operates properly, allow spaces for ventilation and take whatever steps necessary to prevent the entry of foreign objects. Failure to do so might result in bodily injury or mechanical breakdown.
- When fixing the fan with screws, make sure the screw and sheet metal do not deform the frame of the fan before operation. If the frame of the fan is deformed, mechanical failure may be occurred or specified performance may not be generated.
- When fixing the fan with screws, ensure the screwing torque. If the screwing torque is over the recommended torque, fan frame may be deformed or damaged. In order to prevent from loosing screw, please use plain washer and spring lock washer. For screwing torque of each fan type, contact SANYO DENKI or SANYO DENKI distributor.
- When fixing the fan with self-tapping screws, fan frame may be damaged.
- When excessive shock is attacked to fan, impeller may be protruded from the surface of fan frame. Make sure that impeller does not touch cover such as finger guard and mounting plate. Do not give excessive shock to fan to avoid fan failure and deteriorate of fan performance.
- Pulling or pinching the lead wires could result in damage to the wire, and you should avoid placing excessive stresses on these wires. The device should also be installed so that the lead wires are not allowed to come into contact with the rotor or blades. Failure to do so might result in damage or exposure to electrical shock.
- Take proper precautions against static electricity when making electrical connections. Failure to do so might cause the breakdown of the fan or device.

Warning

- Install a finger guard or other cover if there is any danger of fingers, hands or objects coming into contact with the rotor or blades. Failure to do so might result in bodily injury or mechanical breakdown.
- Install the finger guard, filter, and plate to the fan in the correct position while avoiding touching of the rotor blade. Avoiding this will prevent device failure.
  Please use Sanyo Denki genuine finger guards and filter kits.

Environment of usage

- The product must not be used or stored in a flammable or corrosive gas atmosphere, in a place where water or oil splashes (not applicable to Splash Proof or Oil Proof Fans), in a place where there is much dust or humidity, in a place where condensation occurs, in a place where the product is exposed to radioactive rays or is in direct sunlight, in a place where a salty sea breeze blows or seawater splashes, or in an environment where the product may be contaminated by such corrosive materials as sulfurous water, sulfurous volcanic ash, organic solvents, acidic chemicals, alkali chemicals, etc., such hazardous substances as nuclear fuel materials, etc. If it is used or stored in such places or environments, there is the possibility that a fire may occur, the product may malfunction or its performance may deteriorate.
- Avoid using or storing the product in locations and an environment where it could be constantly exposed to vibrations, strong shocks, magnetic or electromagnetic noise, and which the electromagnetic noise overlaps into power voltage. This might result in product breakdown or substandard operation.
- Avoid using or storing the product under environments where rapidly changed such as thermal and humidity change. This might result in product breakdown or deterioration.

Maintenance

- Maintenance and inspections should always be performed by personnel with sufficient training and knowledge. Failure to do so might result in fire, burns, bodily injury, or electrical shock.
- Never perform any maintenance or inspections while the product is in operation. Also note that the blades continue to rotate for some time immediately after operation ceases. You should always be sure to check to see that all rotating parts have come to a stop before beginning work.
- Never use gasoline, paint thinner, benzene, or any other organic solvents to clean the product as this could result in the deformation or substandard operation.